Autonics

MULTI FUNCTION TIMER
AT11DN/AT11EN SERIES

INSTRUCTION MANUAL

Thank you for choosing our Autonics product.
Please read the following safety considerations before use.

Safety Considerations

※Please observe all safety considerations for safe and proper product operation to avoid hazards.

※Safety considerations are categorized as follows.

⚠Warning Failure to follow these instructions may result in serious injury or death.

⚠Caution Failure to follow these instructions may result in personal injury or product damage.

※The symbols usad on the product and instruction manual rapresent the following
⚠ symbol represents caution due to spacial circumstances in which hazards may occur.

⚠Warning

1. **Fail-safe device must be installed when using the unit with machinery that may cause serious injury or substantial economic loss. (e.g. nuclear power control, medical equipment, ships, vehicles, railways, aircraft, combustion apparatus, safety equipment, crime/disaster prevention devices, etc.)**
   Failure to follow this instruction may result in fire, personal injury, or economic loss.
2. **Install on a device panel to use.**
   Failure to follow this instruction may result in electric shock or fire.
3. **Do not connect, repair, or inspect the unit while connected to a power source.**
   Failure to follow this instruction may result in electric shock or fire.
4. **Check 'Connections' before wiring.**
   Failure to follow this instruction may result in fire.
5. **Do not disassemble or modify the unit.**
   Failure to follow this instruction may result in electric shock or fire.

⚠Caution

1. **Use the unit within the rated specifications.**
   Failure to follow this instruction may result in fire or product damage.
2. **Use dry cloth to clean the unit, and do not use water or organic solvent.**
   Failure to follow this instruction may result in electric shock or fire.
3. **Do not use the unit in the place where flammable/explosive/corrosive gas, humidity, direct sunlight, radiant heat, vibration, impact, or salinity may be present.**
   Failure to follow this instruction may result in fire or explosion.
4. **Keep metal chip, dust, and wire residue from flowing into the unit.**
   Failure to follow this instruction may result in fire or product damage.

Ordering Information

AT 11 DN – ☐

Power supply	No mark	100-240VAC 50/60Hz, 24-240VDC
	1	12VDC
	2	24VAC 50/60Hz, 24VDC
Time operation	DN	Time limit 2c
	EN	Instantaneous 1c + Time limit 1c
Number of plug pins	11	11-pin plug type
Item	AT	Analog Timer

※Sockets (PG-11, PS-11(N)) are sold separately.

Time Specifications

Time range	Time unit	Time setting range
0.5	sec	0.05 to 0.5 sec.
1.0		0.1 to 1 sec.
5		0.5 to 5 sec.
10		1 to 10 sec.
0.5	min	0.05 to 0.5 min.
1.0		0.1 to 1 min.
5		0.5 to 5 min.
10		1 to 10 min.
0.5	hour	0.05 to 0.5 hour
1.0		0.1 to 1 hour
5		0.5 to 5 hour
10		1 to 10 hour
0.5	10h	0.5 to 5 hour
1.0		1 to 10 hour
5		5 to 50 hour
10		10 to 100 hour

Unit Description

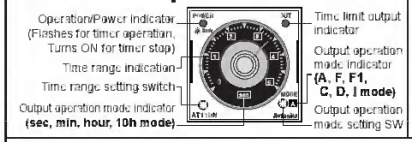

Connections

• AT11DN SERIES

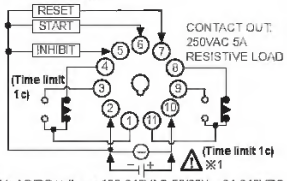

• AT11EN SERIES

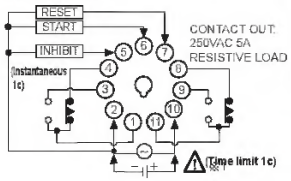

※1: AC/DC voltage: 100-240VAC 50/60Hz, 24-240VDC
: 24VAC 50/60Hz, 24VDC
DC voltage: 12VDC

※The above specifications are subject to change and some models may be discontinued without notice.

※Be sure to follow cautions written in the instruction manual and the technical descriptions (catalog, homepage).

Dimensions

(unit: mm)

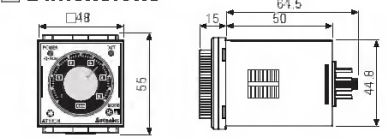

• Bracket

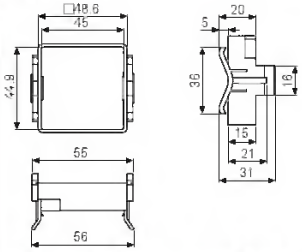

• Panel cut-out

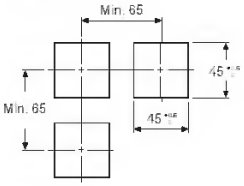

Output Operation Mode

t: Setting time, t=t1+t2, b=t-a

Mode	Time chart
A Signal ON Delay	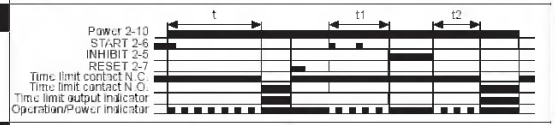
F Flicker (OFF Start)	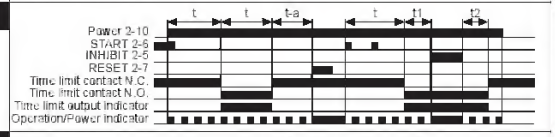
F1 Flicker 1 (ON Start)	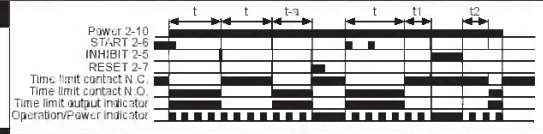
C Signal OFF Delay	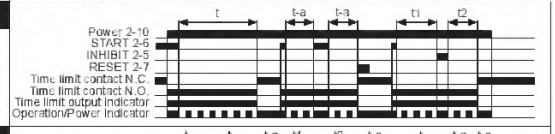
D Signal ON/OFF Delay	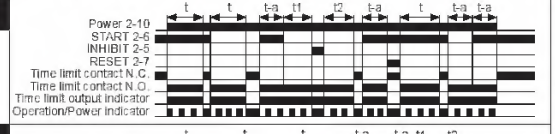
I Interval	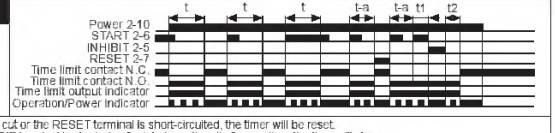

※If power is cut or the RESET terminal is short-circuited, the timer will be reset.
※If the INHIBIT terminal is short-circuited during a time limit operation, the time will stop.
※In case of F, F1 output operation mode, setting time should be over 100ms.
If not, it may cause abnormal output operation due to under 100ms of setting time.

Specifications

Model		AT11DN-☐	AT11EN-☐
Function		Multi Function Timer	
Control time setting range※1		0.05 sec. to 100 hour	
Power supply		•100-240VAC~ 50/60Hz, 24-240VDC⎓ universal •24VAC~ 50/60Hz, 24VDC⎓ universal • 12VDC⎓	
Allowable voltage range		90 to 110% of the rated voltage	
Power consumption		•Max. 3.5VA (100-240VAC~) , Max. 1.5W (24-240VDC⎓) •Max. 4VA (24VAC~), Max. 1.5W (24VDC⎓) •Max. 1W (12VDC⎓)	•Max. 4.3VA (100-240VAC~) , Max. 2W (24-240VDC⎓) •Max. 4.5VA (24VAC~), Max. 2W (24VDC⎓) •Max. 1.5W (12VDC⎓)
Return time		Max. 100ms	
Time operation		Signal ON Start	
Min. input signal width		START, RESET, INHIBIT: Min. 50ms	
Input		START, RESET, INHIBIT: [No-voltage input] - Short-circuit impedance: Max. 1kΩ, Residual voltage: Max. 0.5VDC, Open-circuit impedance: Max. 100kΩ	
Control output	Contact type	Time limit DPDT (2c)	Instantaneous SPDT (1c)+Time limit SPDT (1c)
	Contact capacity	250VAC~ 5A resistive load	
Relay life cycle	Mechanical	Min. 10,000,000 operations	
	Electrical	Min. 100,000 operations (250VAC 5A resistive load)	
Repeat error		Max. ±0.2% ±10ms	
Setting error		Max. ±5% ±50ms	
Voltage error		Max. ±0.5%	
Temperature error		Max. ±2%	
Insulation resistance		100MΩ (at 500VDC megger)	
Dielectric strength		2,000VAC 50/60Hz for 1 minute	
Environment	Ambient temp.	-10 to 55℃, Storage: -25 to 65℃	
	Ambient humid.	35 to 85%RH, Storage: 35 to 85%RH	
Approval		CE cULus	
Accessory		Bracket	
Weight※2		Approx. 132.2g (approx. 85g)	Approx. 134.7g (approx. 87.5g)

※1: Refer to time specifications for control time setting range by model.
※2: The weight includes packaging. The weight in parenthesis is for unit only.
※Environment resistance is rated at no freezing or condensation.

Cautions during Use

1. Follow instructions in 'Cautions during Use'. Otherwise, It may cause unexpected accidents.
2. 12VDC, 24VDC, 24VAC power supply should be insulated and limited voltage/current or Class 2, SELV power supply device.
3. When supplying or turning off the power, use a switch or etc. to avoid chattering.
4. Install a power switch or circuit breaker in the easily accessible place for supplying or disconnecting the power.
5. In order to block peripheral current, use isolation transformer which of secondary part is not grounded as (Figure 1) to supply power to the external input device.

(Figure 1)

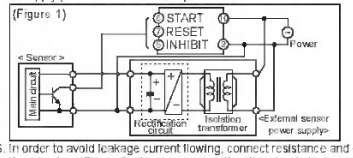

6. In order to avoid leakage current flowing, connect resistance and condenser as (Figure 3).
If connect as (Figure 2), it may cause malfunction due to leakage current.

(Figure 2)

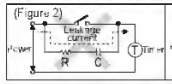

(Figure 3)

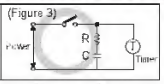

7. Do not connect two or more timers with only one input contact or transistor simultaneously.
8. Keep away from high voltage lines or power lines to prevent inductive noise.
In case installing power line and input signal line closely, use line filter or varistor at power line and shielded wire at input signal line.
Do not use near the equipment which generates strong magnetic force, or high frequency noise.
9. Change setting time, time range, operation mode or etc. after turning off the power of the timer.
10. This unit may be used in the following environments.
   ⓘIndoors (in the environment condition rated in 'Specifications')
   ⓙAltitude max. 2,000m
   ⓚPollution degree 2
   ⓛInstallation category II

Major Products

- Photoelectric Sensors
- Fiber Optic Sensors
- Door Sensors
- Door Side Sensors
- Area Sensors
- Proximity Sensors
- Pressure Sensors
- Rotary Encoders
- Connector/Sockets
- Switching Mode Power Supplies
- Control Switches/Lamps/Buzzers
- I/O Terminal Blocks & Cables
- Stepper Motors/Drivers/Motion Controllers
- Graphic/Logic Panels
- Field Network Devices
- Laser Marking System (Fiber, Co2, Nd: YAG)
- Laser Welding/Cutting System
- Temperature Controllers
- Temperature/Humidity Transducers
- SSRs/Power Controllers
- Counters
- Timers
- Panel Meters
- Tachometers/Pulse (Rate) Meters
- Display Units
- Sensor Controllers

Autonics Corporation
http://www.autonics.com

■ **HEADQUARTERS:**
18, Bansong-ro 513beon-gil, Haeundae-gu, Busan, South Korea, 48002
TEL: 82-51-519-3232
■ **E-mail:** sales@autonics.com

Create recovery media for Windows

Créer des supports de récupération pour Windows

In Windows search, type **Recovery**, click **Create a recovery media**, and follow the instructions on the screen.

Dans la recherche Windows, entrez **Récupération**, cliquez sur **Créer des supports de récupération**, et suivez les instructions à l'écran.

Locate Dell apps in Windows

Localisez vos applications Dell dans Windows

Register your computer
Enregistrez votre ordinateur

Dell Help & Support
Dell aide et assistance

SupportAssist Check and update your computer
Rechercher des mises à jour et installez-les sur votre ordinateur

Features

Caractéristiques

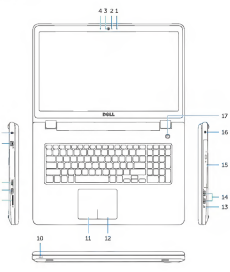

1. Right microphone
2. Camera-status light
3. Camera
4. Left microphone
5. Power-adapter port
6. Network port
7. HDMI port
8. USB 3.0 port
9. Media-card reader
10. Power and battery-status light/ hard-drive activity light
11. Left-click area
12. Right-click area
13. Headset port
14. USB 2.0 ports (2)
15. Optical drive
16. Security-cable slot
17. Power button
18. Regulatory label (in battery bay)
19. Battery
20. Battery-release latch
21. Service-Tag label

1. Microphone droit
2. Voyant d'état de la caméra
3. Caméra
4. Microphone gauche
5. Port de l'adaptateur d'alimentation
6. Port réseau
7. Port HDMI
8. Port USB 3.0
9. Lecteur de carte mémoire
10. Voyant d'état de l'alimentation/Voyant d'activité du disque dur
11. Zone de clic gauche
12. Zone de clic droit
13. Port pour casque
14. Ports USB 2.0 (2)
15. Lecteur optique
16. Emplacement pour câble de sécurité
17. Bouton d'alimentation
18. Étiquettes de conformité aux normes (dans la baie de la batterie)
19. Batterie
20. Loquet de déverrouillage de batterie
21. Étiquette de numéro de série

Shortcut keys

Touches de fonction

F1	**Mute audio** Couper le son
F2	**Decrease volume** Diminuer le volume
F3	**Increase volume** Augmenter le volume
F4	**Play previous track/chapter** Lire le morceau ou le chapitre précédent
F5	**Play/Pause** Lecture/Pause
F6	**Play next track/chapter** Lire le morceau ou le chapitre suivant
F8	**Switch to external display** Basculer vers un moniteur externe
F9	**Open Search charm** Ouvrir l'icône Rechercher
F10	**Toggle keyboard backlight (optional)** Activer/Désactiver le rétroéclairage du clavier (en option)
F11	**Decrease brightness** Diminuer la luminosité
F12	**Increase brightness** Augmenter la luminosité
Fn + Esc	**Toggle Fn-key lock** Verrouiller/Déverrouiller la touche Fn
Fn + PrtScr	**Turn off/on wireless** Activer/Désactiver le sans fil
Fn + Insert	**Sleep** Veille
Fn + H	**Toggle between power and battery-status light/hard-drive activity light** Alterner entre le voyant d'état de l'alimentation et de la batterie/voyant d'activité du disque dur

NOTE: For more information, see Specifications at **Dell.com/support**.

REMARQUE : pour plus d'informations, consultez la section Caractéristiques à l'adresse **Dell.com/support**.

Important safety instructions

Read these instructions carefully. Please put them somewhere safe for future reference.

1. Only use attachments/accessories specified by the manufacturer.
2. Use only with the cart, stand, tripod, bracket, or table specified by the manufacturer, or sold with the apparatus. When a cart is used, use caution when moving the cart/ apparatus combination to avoid injury from tip-over.

3. Unplug this apparatus during lightning storms or when unused for long periods of time.
4. Do not install this equipment in a confined space such a book case or similar unit.
5. No naked flame sources, such as lighted candles, should be placed on the apparatus.
6. If the remote control will not to be used for a long time, remove the batteries. Use the remote control carefully. Do not drop the remote control on the floor. Keep it away from moisture, direct sunlight, and high temperatures.
7. Used or discharged batteries must be properly disposed of or recycled in compliance with all applicable laws. For detailed information, contact your local solid waste disposal authority.
8. Follow all warnings and instructions marked on the product.
9. Unplug this product from the wall outlet before cleaning. Do not use liquid cleaners or aerosol cleaners. Use a damp cloth for cleaning.
10. Do not use this product near water.
11. Do not place this product on an unstable cart, stand or table. The product may fall, sustaining serious damage.
12. Slots and openings are provided for ventilation; to ensure reliable operation of the product and to protect it from overheating, these openings must not be blocked or covered. The openings should never be blocked by placing the product on a bed, sofa, rug or other similar surface. This product should never be placed near or over a radiator or heat register or in a built-in installation unless proper ventilation is provided.
13. This product should be operated from the type of power indicated on the marking label. If you are not sure of the type of power available, consult your dealer or local power company.
14. Do not allow anything to rest on the power cord. Do not locate this product where the cord will be stepped on.
15. If an extension cord is used with this product, make sure that the total ampere rating of the equipment plugged into the extension cord does not exceed the extension cord ampere rating. Also, make sure that the total rating of all products plugged into the wall outlet does not exceed the fuse rating.

Downloaded from www.Manualslib.com manuals search engine

INSTALLATION AN SERVICING INSTRUCTIONS THE FOLLOWING SECTION LISTS THE INSTALLATION REGULATIONS AND REQUIREMENTS

All gas appliances must be installed by a competent person in accordance with the current Gas Safety (Installation and Use) Regulations 1994 (as amended) or the rules in force and in accordance with the manufacturers instructions, failure to do so could lead to prosecution
The following are the relevant Codes of Practice and British Standards.

BS 8303 1986	BS 5440 Pt1 1990 & Pt2 1989	The Building Regulations issued by the
BS1251 1987	BS 5871 Pt2 1991 & Pt3 1991	Department of the Environment. The
BS 6891 1988	BS 6461 Pt1 1984	Building Standards Scotland)(Consolidation)
BS 715 1989	BS 1289 Pt1 1986	Regulations issued by the Scottish Development
BS 7566 Pts 1-4 1992		Department.

TECHNICAL DATA

Overall height of fire	= 614 mm
Minimum height of opening required	= 550 mm
Maximum height of opening	= 590 mm
Minimum width of opening required	= 395 mm
Maximum width of opening with spacer	= 470 mm
Forward projection from opening (With controls cover)	= 140 mm
Min depth of openings	See Figs 1-8
TYPE OF GAS G20 Only	Supply Pressure 20 mbar +/- 1mbar (Cold)
GAS INPUTS (Gross)	
	Maximum 5.42 kW (18500 Btu/h)
	Minimum 2.34 kW (8000 Btu/h)
	Pilot 0.26 kW (890 Btu/h)
Main Injector Type	Bray Cat 82/380
	Or Stereomatic 046/19/196/68M
Pilot Assembly	SIT Oxy/Pilot NG 9022
GAS CONNECTION	8 mm O/D Tube
WEIGHT	22 kg

Note: None of the materials used in the manufacture of this appliance contain asbestos.

INSTALLATION NOTES

Care should be taken to ensure when the appliance is installed into a Pre-cast flue, the chimney breast is lined to prevent the plaster etc, cracking through excessive temperatures.

A certain amount of discolouration (blueing) may be seen on the stainless steel combustion chamber, this is normal due to the temperatures produced in the fire bed.

A hearth must always be provided, a minimum of 340mm and a minimum of 150mm either side of the fire opening with a minimum thickness of 12mm and a perimeter height of 50mm. This is to deter combustible materials, carpets etc, being placed on the hearth.

The area under the firebox must have a minimum non-combustible thickness of 25mm.

Downloaded from www.Manualslib.com manuals search engine

Open view image with major parts indication

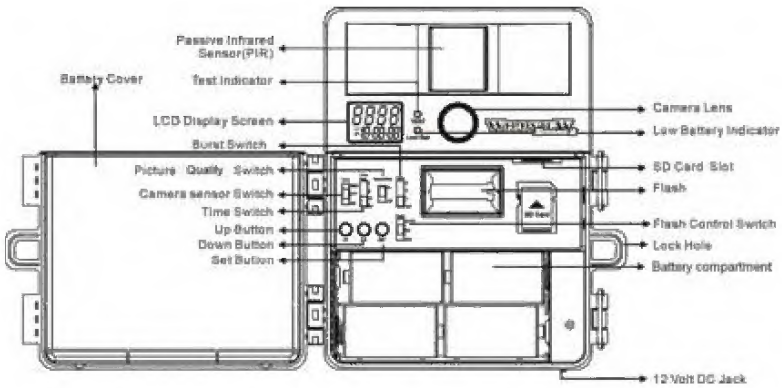

Downloaded from www.Manualslib.com manuals search engine

Product Support Information

Pre-Sales Inquiries and Applications Support.

Please contact your local distributor, ADTRAN Applications Engineering, or ADTRAN Sales:

Applications Engineering	(800) 615-1176
Sales	(800) 827-0807

Post-Sale Support. Please contact your local distributor first. If your local distributor cannot help, please contact ADTRAN Technical Support and have the unit serial number available.

Technical Support	(888) 4ADTRAN

Repair and Return. If ADTRAN Technical Support determines that a repair is needed, Technical Support will coordinate with the Customer and Product Service (CAPS) department to issue an RMA number. For information regarding equipment currently in house or possible fees associated with repair, contact CAPS directly at the following number:

CAPS Department	(256) 963-8722

Identify the RMA number clearly on the package (below address), and return to the following address:

ADTRAN, Inc.
6767 Old Madison Pike
Progress Center
Building #6 Suite 690
Huntsville, Alabama 35807

RMA # _____

8. LIMITED PRODUCT WARRANTY

ADTRAN warrants that for ten years from the date of shipment to Customer, all products manufactured by ADTRAN will be free from defects in materials and workmanship. ADTRAN also warrants that products will conform to the applicable specifications and drawings for such products, as contained in the Product Manual or in ADTRAN's internal specifications and drawings for such products (which may or may not be reflected in the Product Manual). This warranty only applies if Customer gives ADTRAN written notice of defects during the warranty period. Upon such notice, ADTRAN will, at its option, either repair or replace the defective item. If ADTRAN is unable, in a reasonable time, to repair or replace any equipment to a condition as warranted, Customer is entitled to a full refund of the purchase price upon return of the equipment to ADTRAN.

This warranty applies only to the original purchaser and is not transferable without ADTRAN's express written permission. This warranty becomes null and void if Customer modifies or alters the equipment in any way, other than as specifically authorized by ADTRAN.

EXCEPT FOR THE LIMITED WARRANTY DESCRIBED ABOVE, THE FOREGOING CONSTITUTES THE SOLE AND EXCLUSIVE REMEDY OF THE CUSTOMER AND THE EXCLUSIVE LIABILITY OF ADTRAN AND IS IN LIEU OF ANY AND ALL OTHER WARRANTIES (EXPRESSED OR IMPLIED). ADTRAN SPECIFICALLY DISCLAIMS ALL OTHER WARRANTIES, INCLUDING (WITHOUT LIMITATION), ALL WARRANTIES OF MERCHANTABILITY AND FITNESS FOR A PARTICULAR PURPOSE. SOME STATES DO NOT ALLOW THE EXCLUSION OF IMPLIED WARRANTIES, SO THIS EXCLUSION MAY NOT APPLY TO CUSTOMER.

In no event will ADTRAN or its suppliers be liable to Customer for any incidental, special, punitive, exemplary or consequential damages experienced by either Customer or a third party (including, but not limited to, loss of data or information, loss of profits, or loss of use). ADTRAN is not liable for damages for any cause whatsoever (whether based in contract, tort, or otherwise) in excess of the amount paid for the item. Some states do not allow the limitation or exclusion of liability for incidental or consequential damages, so the above limitation or exclusion may not apply to Customer.

9. REGULATORY REQUIREMENTS

Affidavit Requirements for Connection to Digital Services

- An affidavit is required to be given to the telephone company whenever digital terminal equipment without encoded analog content and billing protection is used to transmit digital signals containing encoded analog content which are intended for eventual conversion into voiceband analog signals and transmitted on the network.
- The affidavit shall affirm that either no encoded analog content or billing information is being transmitted or that the output of the device meets Part 68 encoded analog content or billing protection specifications.
- End user/customer will be responsible for filing an affidavit with the local exchange carrier when connecting unprotected customer premise equipment (CPE) to 1.544 Mbps or subrate digital services.
- Until such time as subrate digital terminal equipment is registered for voice applications, the affidavit requirement for subrate services is waived.

Downloaded from www.Manualslib.com manuals search engine

Teletext. Option only available on certain versions.

Press :	Function :
Teletext request	To turn teletext on or off. A main index appears with the list of items to which you have access. If the channel does not have teletext, the screen remains black.
Selecting a page	Use the number keys to select the page you want (always three figures). The number appears in the top left-hand corner, the counter searches then the page is displayed. If the counter continues searching or if P?.. appears, the page is not available. To select the previous or next page.
Stopping the sequence of sub-pages	Certain pages contain sub-pages which follow on automatically. Press the ⊟ key to stop / resume the sequence.
Enlarging a page	Press this button several times to view the upper part, the lower part and then return to normal size.
Hidden information	To reveal hidden information (in games, etc.). Pressing the button a second time will again hide the information.

TV set keys

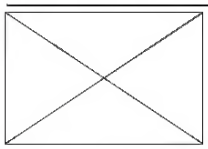

The TV set has 3 or 4 keys (on some models these are located behind a flap).
Versions with 3 keys: A Menu key and - and + keys to select programs and adjust menus.
Versions with 4 keys: two PROGRAM - and + keys and two VOLUME - and + keys.

Connecting other appliances

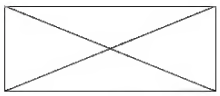

Use the euroconnector socket at the back of the TV set.
To reproduce the picture from connected appliances, press the ⓪ key (AV appears on the screen).
To connect a video recorder, refer to its manual.

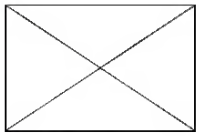

Headphones: (only on some versions)
The headphone socket is on the front of the TV set (depending on version, it may be concealed by a cover).When the headphones are connected, the sound from the TV set is muted. Use the ⊖ ◿ ⊕ key on the remote control to adjust the volume.

Tips

Installation: To avoid any dangerous situations and operating faults, do not place anything on the TV set and leave a space of at least 5 cm around the appliance.

Poor picture quality: The proximity of mountains or high buildings may be responsible for ghost pictures, echoes or shadows. If this is the case, change the orientation of the antenna.
Have you remembered to connect the aerial socket ?

Standby: To save energy and preserve optimum picture quality (by demagnetising the tube), you are advised to switch off your TV set using the on/off button at the front of the TV set.

Recycling directive: To minimise harm to the environment, the batteries supplied with the appliance do not contain mercury or nickel cadmium. When disposing of batteries, if possible use recycling means available to you (contact your dealer).
Your TV set makes use of reusable and recyclable materials. To minimise harm to the environment, specialist companies will recover used TV sets for dismantling and collection of reusable materials.

In the event of a breakdown, under no circumstances attempt to repair tbc TV set yourself, contact your dealer.

Downloaded from www.Manualslib.com manuals search engine

General safety instructions

IMPORTANT INFORMATION

- **The machine is only designed for trimming grass.**
- **The only accessories to be used with the engine unit as a drive source are the cutting units we recommend in the chapter *"Technical data"*.**
- **Never use the machine if you are tired, if you have consumed alcohol, or if you are taking medicines that can affect your sight, your judgement or the control of your body.**
- **Use personal protective equipment. See the section *"Personal protective equipment"*.**
- **Never use a machine that has been modified so that it no longer corresponds with the original design.**
- **Never use a machine that is faulty. Follow the maintenance, control and service instructions in this Operator's Manual. Some maintenance and service actions should be carried out by trained and qualified specialists. See the chapter *"Maintenance"*.**
- **All covers and guards must be fitted before starting the machine. Check that the spark plug cap and HT lead are not damaged, otherwise you could get an electric shock.**
- **The machine operator shall ensure, while working, that no persons or animals come closer than 15 metres (50 feet). When several operators are working in the same area the safety distance should be at least double tree length, however, at least 15 metres (50 feet).**

WARNING!
Faulty cutting equipment increases the risk of accidents.

Start

WARNING!
When the engine is started with the choke in either the choke or start throttle positions the cutting equipment starts to rotate immediately.

- The complete clutch cover with shaft must he fitted before the machine is started, otherwise the clutch can become loose and cause personal injury.
- Never start the machine indoors. Bear in mind the dangers of inhaling the engine's exhaust fumes.
- Observe your surroundings and make sure that there is no risk of people or animals coming into contact with the cutting equipment.
- Place the machine on the ground, ensure the cutting equipment runs free of twigs and stones. Push the machine hody towards the ground using your left hand. (NOTE! Not with your foot). Grip the starter handle with your right hand and pull the startercord.

Fuel safety

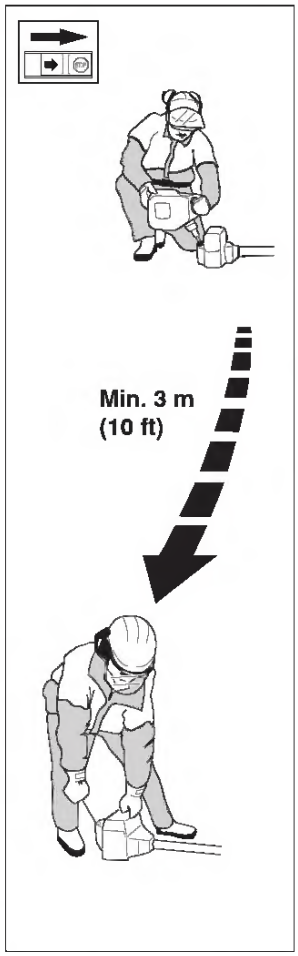

- Always use a fuel container with an anti-spill valve.
- Never fill the machine while tbe engine is running. Always stop the engine and let it cool for a few minutes before refuelling.
- Provide good ventilation when filling or mixing fuel (petrol and 2-stroke oil).
- Move tbe macbine at least 3 m from the filling position hefore starting.
- Never start the machine:

a) If you have spilt fuel on it. Wipe up all spillage.

b) If you have spilt fuel on yourself or your clothes. Change your clothes.

c) If there is a fuel leak. Make regular checks for leakage from the fuel cap and the fuel supply pipes.

Transport and storage

- Store and transport the machine and fuel so that any leakage or fumes do not risk coming into contact with sparks or naked flames. For example, electric machines, electric motors, electrical switches/power switches, heaters or the like.
- When storing and transporting fuel approved containers intended for this purpose must be used.
- When storing the machine for long periods the fuel tank must he emptied. Contact your local petrol station to find out how to dispose of excess fuel.

WARNING!
Exercise great care when handling fuel. Bear in mind the risk of fire, explosions and inhaling fumes.

Downloaded from www.Manualslib.com manuals search engine

Importing the Same Phonebook Data to other Cordless handsets

You can export the phonebook data created on a cordless handset to a PC, and then import it into other cordless handsets.

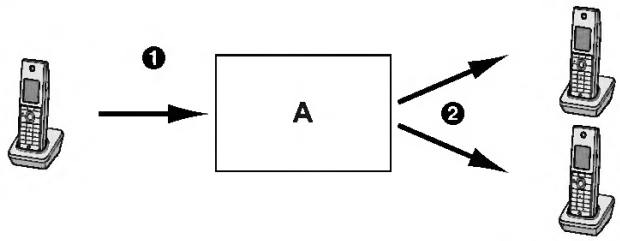

You can also import phonebook data created on a PC to other cordless handsets.

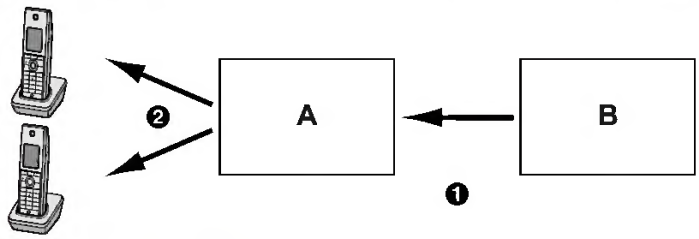

Import/Export File Format

The file format used for importing and exporting the phonebook data is "TSV". When importing or exporting using Microsoft Excel, "CSV (Comma-separated Value)" is generally used as the file format.
A phonebook entry in the cordless handset has 9 fields. An entry in the phonebook data is represented in text as "record ID <TAB> name <TAB> reserved <TAB> phone number <TAB> phone number <TAB> phone number <TAB> phone number <TAB> phone number <TAB> reserved <line break>".
The text data can be edited using any text editing software that supports UTF-16 encoding with a BOM and little endian byte ordering. When you save the text file, it must be saved using the same format, or the text might become garbled.

FUNCTIONS OF REMOTE CONTROL

⑬ **Main Index Button**
In teletext mode, press button to return to the main index page.

⑭ **Frownie button**
Allows to delete stored personal preference channels in your Personal Preference list. For detailed description of functions, refer to section on "Personal Zapping ".

⑮ **Smart Picture Button**
Press the Smart Picture button repeatedly to access 5 different types of picture settings and choose your desired setting.

⑯ **Incredible Surround Button**
– Allows you to select Incredible Surround sound when transmission is in stereo mode.
– Allows you to select Spatial Sound when transmission is in mono mode.

⑰ **Cursor Right Button**
Allows you to access the sub-menus and adjust the settings.

⑱ **Cursor Down Button**
Allows you to select the next item on the menu.

⑲ **Channel + / – Buttons**
Allows you to select channels in ascending or descending order.

⑳ **Mute Button**
Mutes sound. To restore sound, press button again.

㉑ **Teletext Button**
Refer to section on "Using the Teletext"

㉒ **OSD button**
Allows you to display the current channel number. It also allows to exit menu from the screen after control adjustments.

㉓ **Digit (0 -9) Buttons**
Press to select a channel. For a 2-digit channel number, press the first digit and followed immediately by the second digit.

㉔ **A/V Button**
Allows you to select the AV channels.

㉕ **Sleeptimer Button**
Allows you to select a time period after which the set will switch to standby mode automatically.

5-11_34PT4323/E 10 03/04/03, 5:34 PM

Downloaded from www.Manualslib.com manuals search engine

Main Unit Disassembly Process

Item	Screw	Color
A	M2 x L4	Black
E	M2 5 x L6	Black
H	M2 5 x L5	Black
I	M2 x L6	Black

Downloaded from www.Manualslib.com manuals search engine

Remote End Initiated LBK Tests

The U-BR1TE supports loophacks generated from the IDSL OCU-R which allow testing to he performed without coordination with the CO or test center. Loophacks initiated hy the OCU-R front panel LBK pushhutton, aid in system turn-up testing or trouhleshooting from the remote end.

The U-BR1TE responds to a loophack command initiated at the OCU-R as follows:

Pressing the OCU-R LBK pushhutton once will initiate a loophack at the U-BR1TE towards the customer. See **Figure 9**. This allows data to he sent from the remote end to test the local loop and the IDSL OCU-R. This loophack is indicated hy a flashing CUST LBK LED on the IDSL OCU-R and a solid LBK LED on the U-BR1TE.

Pressing the OCU-R LBK pushhutton a second time initiates a loophack at the OCU-R towards the 4-wire DDS (CPE) interface. A solid CUST LBK LED on the IDSL OCU-R indicates a loophack at the IDSL OCU-R towards the customer equipment. See **Figure 10**. Pressing the OCU-R LBK pushhutton a third time disahles all current latching loophacks initiated hy the LBK pushhutton.

If errors exist the loophacks can help determine the source; either the local loop or the IDSL OCU-R. During a remote end initiated loophack the IDSL/DDS system transmits ASC 9Eh towards the network, indicating an out-of-service condition generated hy the remote end, as shown in Figures 9 and 10.

All IDSL/DDS system latching loophacks, whether initiated hy the IDSL OCU-R craft interface, LBK pushhutton, CO, or from a remote Test Center, may he released by sending 35 DDS loop down TIP hytes <X0111010> (Where X is a "don't care" hit.) All existing latching loophacks may also he disahled hy pressing the LBK pushhutton on the CO or remote unit.

NOTE

The remote end test feature is only supported when the upstream U-BR1TE is an ADTRAN D4 or Series 5 U-BR1TE with DDS Loophack capahility. Other U-BR1TEs will ignore the loopback command sent hy pressing the IDSL OCU-R LBK hutton.

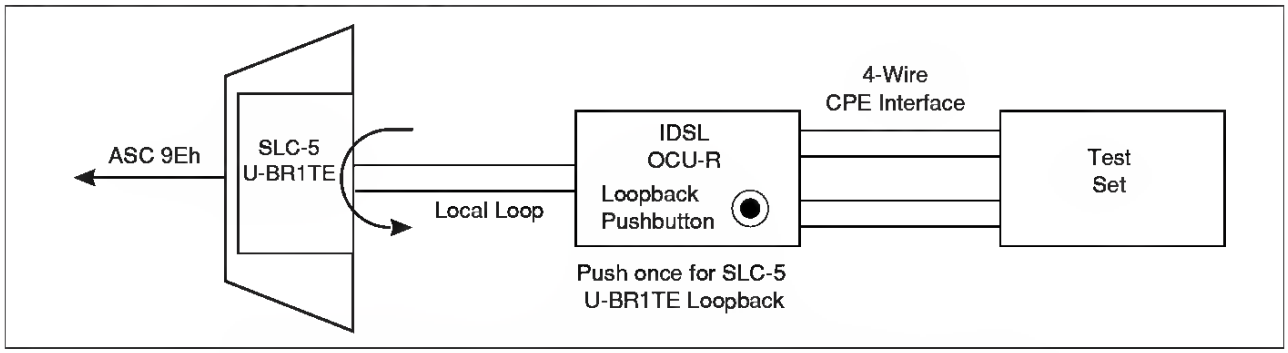

Figure 9. IDSL/DDS Remote End Initiated Loopback, Local Loop

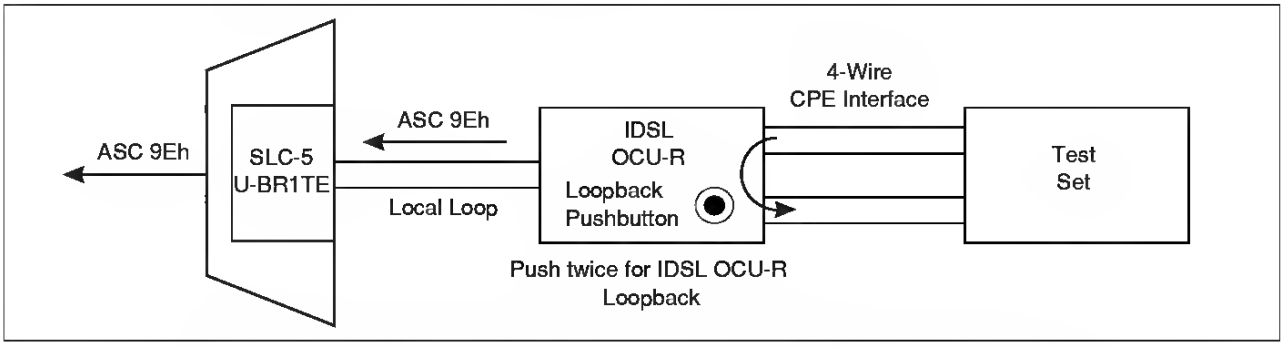

Figure 10. IDSL/DDS Remote End Initiated Loopback, Customer Loop

Downloaded from www.Manualslib.com manuals search engine

Gerätebeschreibung

Geräteansicht
(verschiedene Modelle)

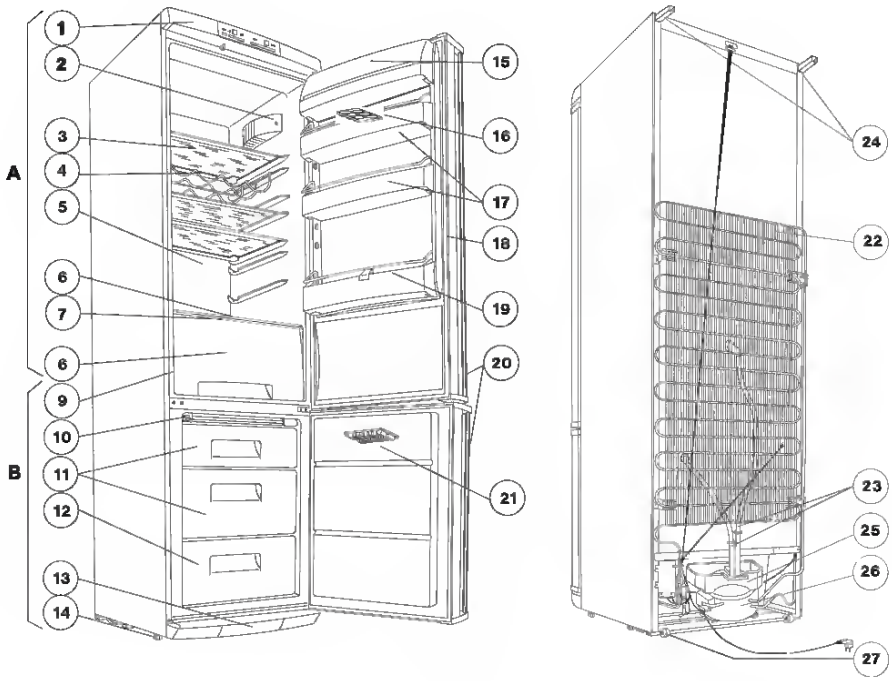

S 75388 KG

A - Kühlgerät

B - Tiefkühlgerät

1. Abdeckplatte mit Anzeigeschalter
2. Beleuchtungsarmatur
3. Glasregale
4. Drahtregal für Flaschenaufbewahrung
5. Kühlfläche
6. Schmelzwassersammler
7. Glasregal
8. Obstfächer
9. Datenschild
10. Lüftungsgitter
11. Lagerfächer mit Korb
12. Tiefkühlfach mit Korb
13. Untere Gitterblende
14. Verstellbare Füße
15. Deckel Butterfach
16. Eierbehälter
17. Türregal
18. Türdichtungsprofil
19. Flaschenregal
20. Türgriffe
21. Eisplatte
22. Kondensator
23. Schmelzwasserableitung
24. Distanzhalter
25. Verdampfertablett
26. Verdichter
27. Rollen

Downloaded from www.Manualslib.com manuals search engine

English

Enable offline access to Google Drive files

You can access files stored on your Google Drive while offline, but first you must enable offline access:

1. In the Apps panel, click on the **Files** icon, then click on **Google Drive**.
2. Select the file (s) you want to access offline.
3. Right-click to bring up the context sensitive menu and click on **Available offline**. A check mark will appear to indicate the file is available offline.

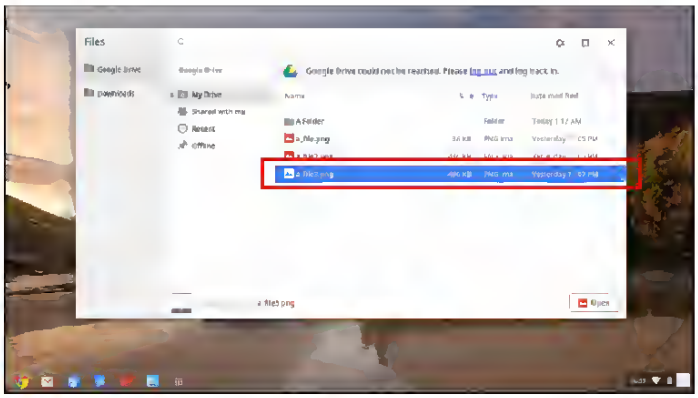

Gmail

Composing an email

1. From the launcher, click on the **Gmail** icon.
2. Click **COMPOSE**.
3. Enter the recipient's email address, the subject, and the message.
4. When you are finished composing your message, click **Send**.

Google Docs

Creating a new document

1. From the launcher, click on the **Google Drive** icon ( ).
2. Click on **CREATE** and select the type of document you want to create.

YouTube

YouTube is a video-sharing website on which users can upload, share and view videos. You can access it by clicking the **YouTube** icon on the launcher.

Downloaded from www.Manualslib.com manuals search engine

Communication	Modem: 56K ITU V.92 modem with PTT approval, Wake-on-Ring ready LAN: 10/100 Mbps Fast Ethernet, Wake-on-LAN ready Wireless LAN (optional): integrated miniPCI 802.11b/g Wi-Fi CERTIFIED™ solution Acer SignalUp wireless technology support Wireless PAN (optional): integrated Bluetooth®
I/O interface	Three USB 2.0 ports Ethernet (RJ-45) port Modem (RJ-11) port External display (VGA) port Microphone/line-in jack Headphones/speaker/line-out port Type II PC Card slot DC-in jack for AC adaptor
Security	Kensington lock slot BIOS user and supervisor passwords
Software	Acer Launch Manager Acer eManager (eSetting/ePresentation/eRecovery) Acer Arcade Acer GridVista (for selected model only) Acer System Recovery CD Norton AntiVirus™ Adobe® Reader® NTI CD-Maker™
Options and accessories	256 or 512 MB and 1 GB soDIMM memory Li-ion battery pack 65 W AC adaptor
System compliance	Mobile PC 2001 ACPI 1.0b DMI 2.0 Wi-Fi®
Warranty	One-year International Travelers Warranty (ITW)

Note: The specifications listed above are for reference only. The exact configuration of your PC depends on the model purchased.

Downloaded from www.Manualslib.com manuals search engine

Selecting the Reference

The XVC-1001-DC card provides four sources for referencing the outgoing video signal. At the bottom of the **Card Setup** window, the reference selection can be chosen from a drop down menu. The reference selection is automatically saved and will be restored after power-up.

The XVC-1001-DC accepts tri-level, bi-level and black burst reference signals.

Reference Selection

The **Reference Selection** function allows the user to select from 4 possible synchronization signals.

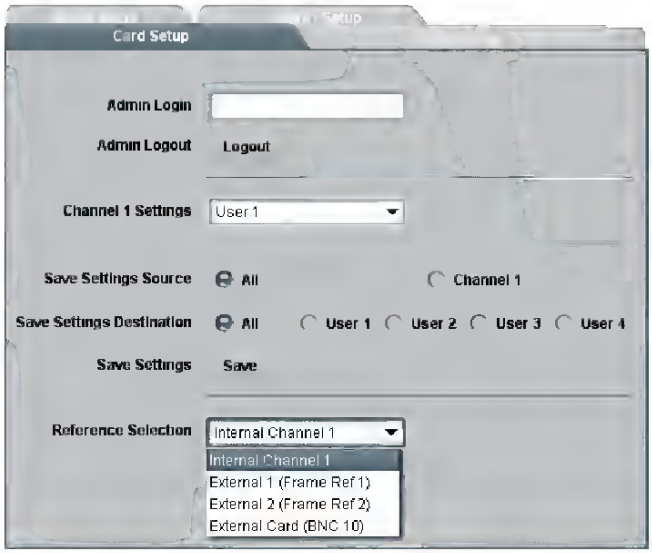

Select from:

Internal Channel 1: Extracts the reference from the channel 1 (input 1) video signal. The input 1's reference signal can be independent from the house sync signal and be of a different frame rate.

External 1 (Frame Ref 1): The openGear frame has a distributed frame reference, allowing a single incoming reference sync signal to feed information to all modules in a frame. External 1 uses the reference signal from the openGear frame's REF 1 input. The XVC-1001-DC's video input 1 must be genlocked with the openGear's REF 1 input to use that selection.

External 2 (Frame Ref 2): External 2 uses the reference signal from the openGear frame's REF 2 input. The XVC-1001-DC's video input 1 must be genlocked with the openGear's REF 2 input to use that selection.

ded from www.Manualslib.com manuals search engine

Copying pictures to your computer

1 Installing the driver and application

You need to install DV 3100 Driver before your camera connects to your computer at the first time. Please follow the steps to complete the installation.

※ MS XP users can skip this step 1 and go to step 2 directly if you don't use PC Camera function.

❶ Turn on your computer.
※ Do not connect your USB Cable to your computer in this step.
※ Turn off the application programs running on your computer.

❷ Place the accessory CD into the CD-ROM drive.

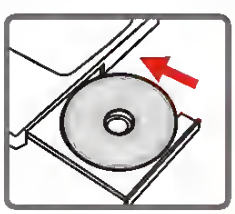

The title appears in a few seconds.

If no title appears on screen

① Double-click the icon "My computer".

② Double-click the icon CD-ROM ("DV3100 (E:)*")

*The CD-ROM driver varies, depending on how your computer is set up.

❸ Move the cursor to "DV 3100 Driver" and click on it.

Click on the item "DV 3100 Driver".

Downloaded from www.Manualslib.com manuals search engine

from 25 percent (the most common) to 56 percent (for high airflow). A 25 percent perforated tile provides approximately 500 cubic feet per minute (cfm) at a 5 percent static pressure drop, while a 56 percent perforated tile provides approximately 2000 cfm.

Rack geometry

Designing the data center layout to form hot and cold aisles is one step in the cooling optimization process. Also critical is the geometry of the rack layout. Research by HP Laboratories has revealed that minor changes in rack placement can change the fluid mechanics inside a data center and lead to inefficient utilization of CRAC units. See the "Thermal Assessment Services" section for more information.

Cooling footprint

The floor area that each rack requires must include an unobstructed area to draw in and discharge air. Almost all HP equipment cools from front to rear so that it can be placed in racks positioned side-by-side. The cooling footprint (Figure 13) includes width and depth of the rack plus the area in front for drawing in cool air and the area in back for exhausting hot air.

Equipment that draws in air from the bottom or side or that exhausts air from the side or top will have a different cooling footprint. The total physical space required for the data center includes the cooling footprint of all the racks plus free space for aisles, ramps, and air distribution. Typically, a width of two floor tiles is needed in front of the rack, and a width of at least one unobstructed floor tile is needed behind the rack to facilitate cable routing.

Figure 13. Cooling footprint

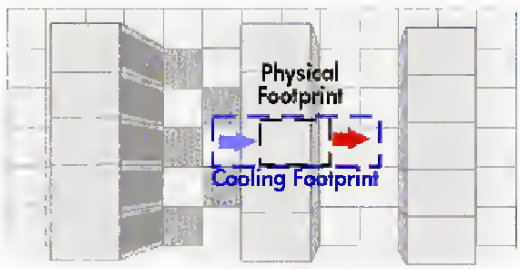

Hot and cold aisle spacing

The amount of space between rows of racks is determined as follows.

- Cold aisle spacing should be 48 inches, two full tiles, and hot isle spacing should be at least one full tile, 24 inches minimum. This spacing is required for equipment installation and removal and for access beneath the floor.
- Cold aisles should be a minimum of 14 feet apart, center-to-center, or seven full tiles.

Row configuration

Keep equipment rows as long as safety requirements will allow and avoid row gaps to prevent mixing of the hot and cold air.

Where possible, locate high-density racks in the middle of equipment rows or mid-way between opposing air-conditioners. Avoid locating high-density racks at the ends of rows or deep into room corners.

Downloaded from www.Manualslib.com manuals search engine

TABLE 3. Status - Error Conditions

Alternating Green/Yellow	The current configuration is corrupt and the factory default configuration is being used
Solid Red	The Host RJ-11 IP Gateway has encountered a fatal error, contact technical support for assistance.

- **ETHERNET** - Indicates the status of the Ethernet connection (RJ-45 port).

TABLE 4. Ethernet

LED Condition	Description
Solid Green	The Ethernet link is available and idle.
Green/Yellow Blinking	Network traffic is detected.
Off	The Ethernet link is unavailable.

- **PHONE** - Indicates the status of the phone port (RJ-11).

TABLE 5. Phone

LED Condition	Description
Solid Green	The port is open and idle.
Blinking Green	The port is open, and data is being transmitted or received. When data is being continuously transferred, this LED will blink approximately 2 times per second.
Blinking Red	Data errors will cause periodic red blinks. Persistent red blinks may imply a configuration problem (incorrect baud rate, parity settings, etc.)
Yellow	Port is closed.
Solid Red	Port hardware has failed.
Off	Power is off.

Downloaded from www.Manualslib.com manuals search engine

5-01

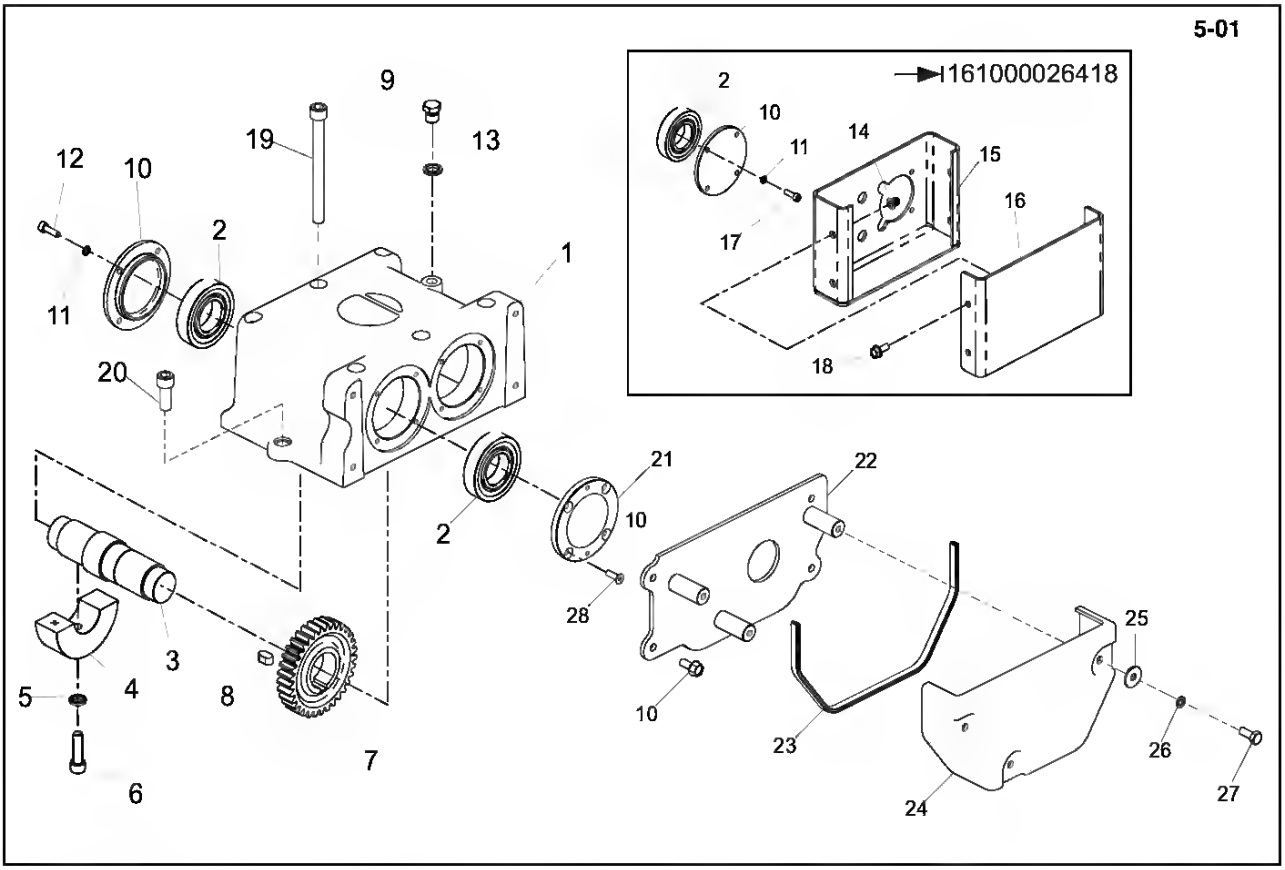

Gearbox Assembly, Ensemble boîte de vitesses, Conjunto de caja de engranajes, Conjunto da Caixa de Engrenagens

5-01

1	161-99514	Gearbox Casing	Carter de boîte de vitesses	Envoltura de la transmisión	Estojo da caixa de engrenagens		1
2	12 1 160	Bearing	Roulement	Cojinete	Rolamanto		4
3	161-99507	Shaft	Axe	Eje	Veio		1
4	161-99509	Weight 25	Poids 25	Peso 25	Peso 25		1
	161-99517	Weight 30	Poids 30	Peso 30	Peso 30		1
5	05 3 067	Washer	Rondelle	Arandela	Anilha	M10	4
6	7-1004	Screw	Vis	Tornillo	Parafuso	M10 x 35	2
7	161-99510	Gear	Pignon	Engranaje	Engrenagen		1
8	161-99512	Key	Clavette	Chaveta	Chave	M10 x 8 x 18	1
9	14 0 108	Plug	Bougie	Tapon	Bujão	1/4"	1
10	161-99504	End Cover	Carter d'extrémité	Tapa de fondo	Tampa de extremidade		2
11	4-6005	Washer	Rondelle	Arandela	Anilha	M6	16
12	7-6040	Screw	Vis	Tornillo	Parafuso	M6 x 20	4
13	15 0 102	Washer	Rondelle	Arandela	Anilha	1/4"	2
14	01 5 036	Nut	Ecrou	Tuerca	Porca	M8	4
15	👁 Item 29	Belt Guard	Capot de courroie	Protector de la correa	Guarda da Cinta		1
16	👁 Item 29	Cover	Couvercle	Cubierta	Tampa		1
17	7-6041	Screw	Vis	Tornillo	Parafuso	M6 x 25	4
18	7-8037	Screw	Vis	Tornillo	Parafuso	M8 x 20	4
19	10 330-12130	Screw	Vis	Tornillo	Parafuso	M12 x 130	6
20	7-12023	Screw	Vis	Tornillo	Parafuso	M12 x 30	2
21	161-99678	End Cover	Carter d'extrémité	Tapa de fondo	Tampa de extremidade		1
22	161-10100	Guard	Capot	Protector	Guarda		1
23	21 0 029	Edging Strip	Gaine Protection	Banda Protectora	Fita de rebordo		x
24	161-99676	Belt Guard	Capot de courroie	Protector de la correa	Guarda da Cinta		1
25	4-8004	Washer	Rondelle	Arandela	Anilha	M8	3
26	4-8003	Washer	Rondelle	Arandela	Anilha	M8	3
27	7-8011	Screw	Vis	Tornillo	Parafuso	M8 x 20	3
28	7-6025	Screw	Vis	Tornillo	Parafuso	M6 x 20	4
29	161-10600	Belt Guard Kit	Ensemble Capot de courroie	Cto. Protector de la correa	Conj. Guarda da Cinta		1

Downloaded from www.Manualslib.com manuals search engine

cloth lightly dampened with a mild detergent solution. Never use strong solvents such as thinner, benzene, or abrasive cleaners, since these will damage the cabinet. As a safety precaution, always unplug the monitor before cleaning it.

Adjusting the Picture

a. How to Adjust the Setting

1. Press the MENU-button to activate the OSD window.
2. Press <or >to select the desired function.
3. Press the MENU-button to select the function that you want to adjust.
4. Press < or >to change the settings of the current function.
5. To exit and save, select the exit function. If you want to adjust any other function, repeat steps 2-4.

Analog Only Model

I. Analog-Only Model

Dual-Input model (Optional)

II. Dual-Input Model, Analog Signal Input

III. Dual-Input Model, Digital Signal Input

Downloaded from www.Manualslib.com manuals search engine

Menu Item / Elément de menu/ Menüpunkt	Sub Menu Item/ Elément de sous-menu/ Untermenüpunkt	Function	Fonction	Funktion
Color Adjustment		adjusts color temperature of your monitor	Ajuste la température de couleur de votre moniteur	Stellt die Farbtemperatur des Monitors ein
Recall		Displays current setting for horizontal frequrncy, refresh rate and resolution when highlighted Press to recall geometry settings preset at factory	Affiche le paramètre actuel pour la fréquence horizontale, taux de rafraîchissement et résolution, quand sélectionné Appuyez pour rappeler les paramètres géométrie du fabncant Eliminer le magnétisme non désiré, qui peut causer des couleurs inadéquates	Zeigt, wenn aktiviert, aktuelle Werte für Horizontal-Frequenz, Bildwiederholfrequenz und Auflosung Aktiviert werkseitig voreingestellte ergonometrische Werte
Degauss		Remove unwanted magnetism that can result in color impurity	Eliminer le magnétisme non désiré, qui peut causer des couleurs inadéquates	Entfernt Magnetfelder, die sich storend auf die Farbreinheit auswirken konnen
etc Miscellaneous	Hor Moire	adjusts horizontal Moire	règle le moiré horizontal	aßt sich das honzontale Moire einstellen
	Ver Moire	adjusts vertical Moire	règle le moiré vertical	aßt sich das vertikale Moire einstellen
	OSD Position	adjusts OSD horizontal and vertical position	règle la position OSD horizontale et verticale	Dient zur Einstellung der honzontalen und vertikalen Position des OSD
	ABC Launguage	**De** Deutsch **En** English **Es** Español **Fr** Français **It** Italiano **Jp** Japanese (Optional)		

SERVICING OF VEHICLE

Your dealer is interested in your new vehicle and has the desire to help you get the most value from it. After reading this manual thoroughly, you will find that you can do some of the regular maintenance by yourself.
However, when in need of parts or major service, be sure to see your KUBOTA Dealer.
For service, contact the KUBOTA Dealership from which you purchased your vehicle or your local KUBOTA Dealer.
When in need of parts, be prepared to give your dealer the serial number of the vehicle, engine, transmission and ROPS.
Locate the serial numbers now and record them in the space provided.

	Type	Serial No.
Vehicle		
Engine		
Transmission		
ROPS		
Product Identification Number		
Date of Purchase		
Name of Dealer (To be filled in by purchaser)		

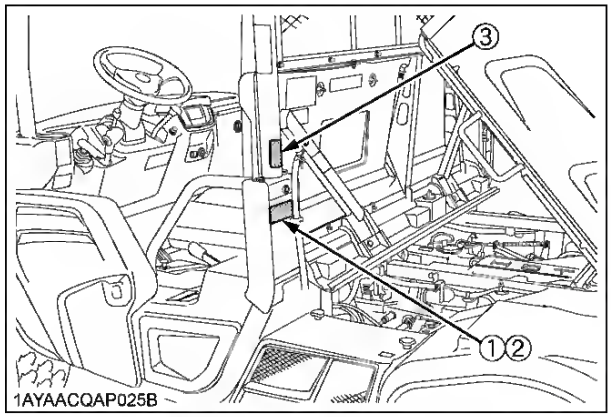

(1) Vehicle identification plate
(2) Product identification number
(3) ROPS serial number

◆ Warranty

This vehicle is warranted under the Kubota Limited Express warranty a copy of which may be obtained from your selling dealer. No warranty shall, however, apply if the vehicle has not been handled according to the instruction given in the Operator's Manual even it is within the warranty period.

◆ Scrapping the vehicle and its procedure

To put the vehicle out of service, correctly follow the local rules and regulations of the country or territory where you scrap it. If you have questions, consult your local KUBOTA Dealer.

Downloaded from www.Manualslib.com manuals search engine

4.6 CONTRAST

Step 1: Press MENU to enter the menu selection.

Step 2: Press PLAY to select the "CONTRAST" option.

Step 3: Press PLAY to select the contrast level you prefer.

There are 16 levels to choose from.

4.7 LANGUAGE

Step 1: Press MENU to enter the menu selection.

Step 2: Press PLAY to select the "LANGUAGE" option.

Step 3: Press PLAY to select the display language.

There are three modes to choose from:

1. 中文简体
2. 中文繁體
3. ENGLISH

4.8 VERSION

Step 1: Press MENU to enter the menu selection.

Step 2: Press PLAY to select "VERSION" to see the version.

Note: The version of the software refers to the machine.

4.9 SN

Step 1: Press MENU to enter the menu selection.

Step 2: Press PLAY to select the "SN" option to see the serial

Downloaded from www.Manualslib.com manuals search engine

WARNING

To reduce the risk of electric shock, fire, explosion, serious injury or death:
- **Disconnect electric power to the tumble dryer before servicing.**
- **Close gas shut-off valve to gas tumble dryer before servicing.**
- **Close steam valve to steam tumble dryer before servicing.**
- **Never start the tumble dryer with any guards/panels removed.**
- **Whenever ground wires are removed during servicing, these ground wires must be reconnected to ensure that the tumble dryer is properly grounded.**

W002R1

Daily Maintenance

Inspect the area surrounding tumble dryers, remove all combustible materials, including lint, before operating the machine								
Check cylinder for foreign objects to avoid damage to clothing and equipment								
Clean lint from lint compartment and screen to maintain proper airflow and avoid overheating								

Monthly Maintenance

Remove lint and debris from inside exhaust duct to maintain proper airflow and avoid overheating								
Ensure even lint distribution over lint screen, replace if distribution of lint is uneven to maintain proper airflow and avoid overheating								
Carefully wipe any accumulated lint off the cabinet high limit thermostat and thermistor, including perforated cover. Lint buildup will act as an insulator, causing machine to overheat.								
Clean lint and debris buildup from blower to maintain proper airflow, avoid overheating and prevent possible vibration								

© Copyright, Alliance Laundry Systems LLC – DO NOT COPY or TRANSMIT

Downloaded from www.Manualslib.com manuals search engine

TUNING INTO A STATION MANUALLY
SINTONÍA MANUAL DE EMISORAS
ACCORD MANUEL D'UNE STATION

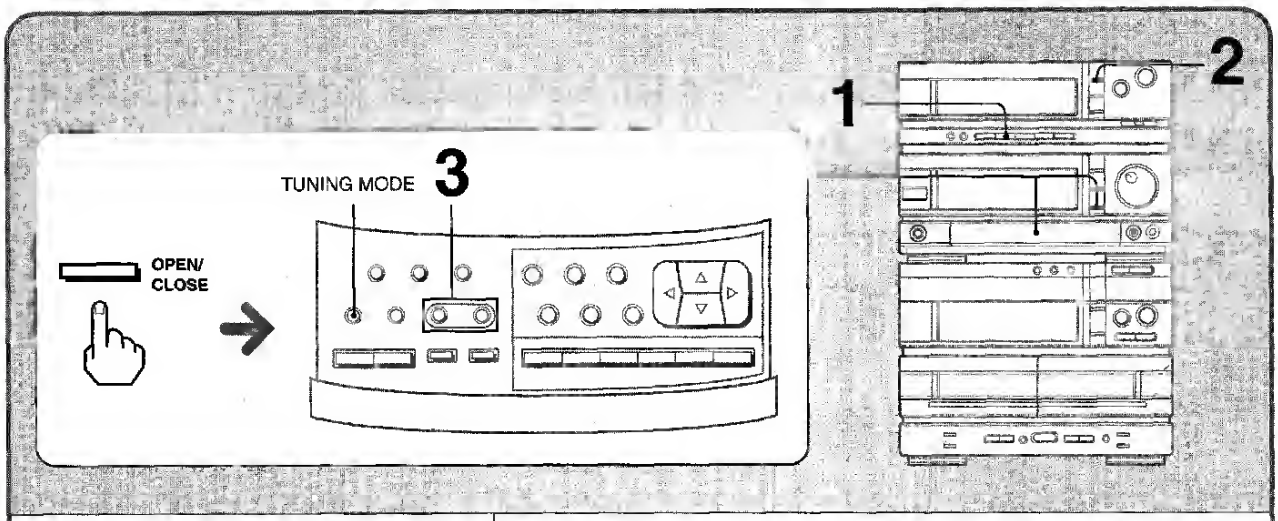

1 Press the TUNER button.
Presione el botón TUNER.
Appuyez sur TUNER.

2 Select a band.
Seleccione la banda.
Sélectionnez la gamme d'onde.

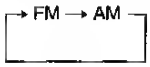

3 Select a station.
Seleccione la emisora.
Sélectionnez une station.

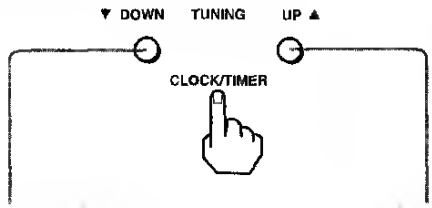

For lower frequencies
Para frecuencias inferiores
Vers les fréquences intérieures

For higher frequencies
Para frecuencias superiores
Vers les fréquences supérieures

Auto search
If a TUNING button is held for 0.5 or more seconds, the frequencies are automatically searched. When a strong frequency is found, "TUNE" lights and auto search stops. To stop the auto search manually, press the UP or DOWN button.

Note
If the broadcast signal is weak, auto search may not stop at a given station frequency.

Búsqueda automática
Si mantiene presionado un botón TUNING durante 0,5 o más segundos, las emisoras se buscarán automáticamente. Cuando se encuentre una emisora de recepción clara, se encenderá "TUNE" y la búsqueda automática cesará. Para parar manualmente la búsqueda automática, presione el botón UP o DOWN.

Nota
Si la señal de radiodifusión es demasiado débil, es posible que la búsqueda automática no se para en la frecuencia de cierta emisora.

Recherche automatique
Si vous appuyez pendant plus d'une demi-seconde sur une des touches TUNING, le tuner recherche automatiquement les fréquences. Lorsqu'il détecte une émission puissante, l'indicateur TUNE s'allume et la recherche automatique s'arrête. Pour arrêter manuellement la recherche automatique, appuyez sur la touche UP ou DOWN.

Remarque
Si le signal d'émission est faible, la recherche automatique risque de ne pas détecter la fréquence d'une station donnée.

Downloaded from www.Manualslib.com manuals search engine

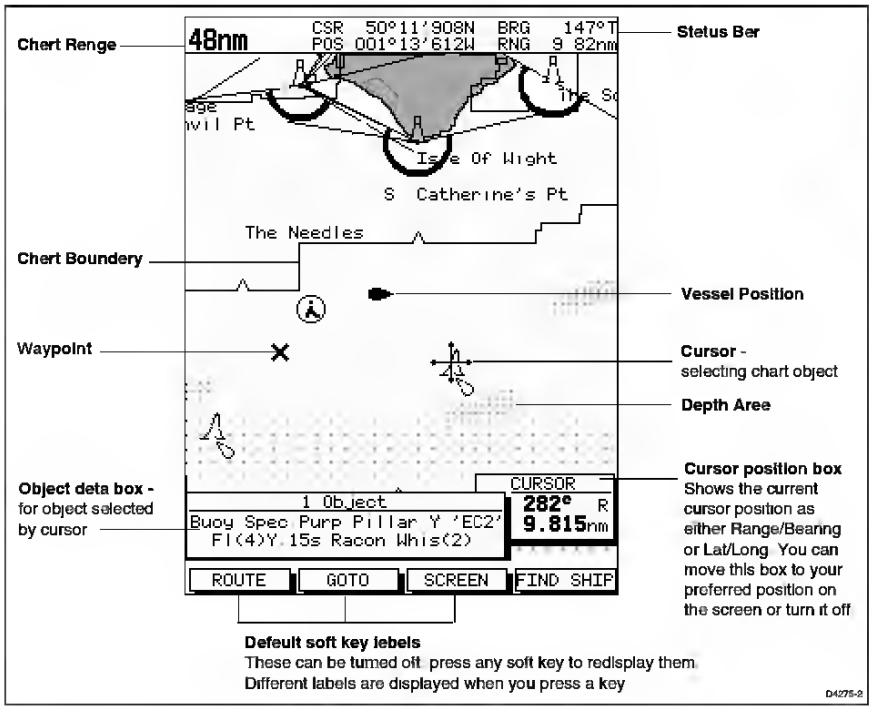

Downloaded from www.Manualslib.com manuals search engine

MODEL 718D, 721, 721D, and 725
(All Kubota engines)

NOTES:
1. To see the wiring diagram for models with serial numbers of 340725 and higher, refer to figure 43 on page 43.

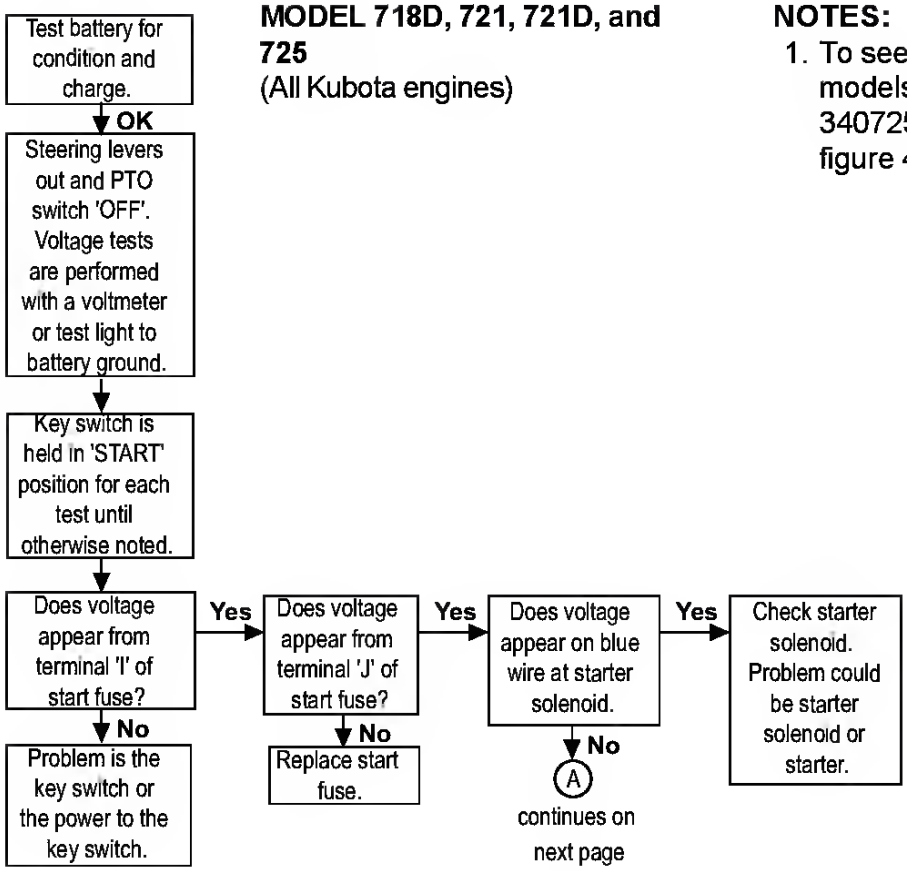

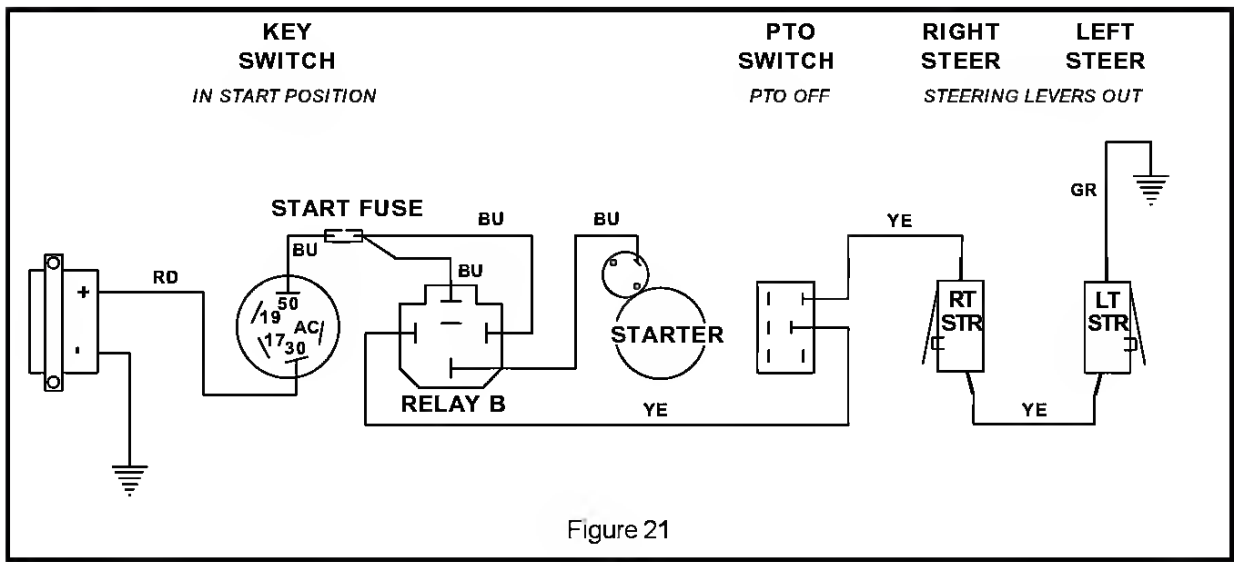

Figure 21

Downloaded from www.Manualslib.com manuals search engine

Symptom	Possible cause	Solution
The drum illumination does not work	Is the tumble dryer plugged in	Plug in the tumble dryer
	The program selector is in the OFF position	Turn the program selector dial to LIGHT
	The bulb needs replacing	Replace bulb
The drying process takes unusually long	The condenser unit is covered with fluff	Clean the condenser unit
	Fluff filter is clogged	Clean the fluff filter
The door cannot be closed	Fluff filter has not been inserted correctly and/or the filter lid not closed	Replace the fluff filter and ensure the filter lid is closed
The door cannot be opened with the DOOR button	Electric mains plug not connected	Connect the mains plug
	Program selector set to OFF	Set a program. The fill-in door can be opened at any time by pressing firmly against the door (pressing location)
Display EMPTY WATER is lit	Condensate container full	Empty the condensate container
EMPTY WATER indicator illuminated, even though the container has already been emptied	Foreign bodies, e. g. animal hairs, can block the inlet nozzle as well as the valve on the end of the EMPTY WATER container	With the container pulled out, switch on the appliance momentarily. The blockage can be removed from the container shaft or the hair cleaned out of the valve
The remaining running time display changes rapidly.	The remaining running time is adjusted automatically depending on the type of items being washed, the washing time and the degree of dampness.	Automatic process. There is no unit fault.

Downloaded from www.Manualslib.com manuals search engine

Calling a contact's internet calling address

You must add an internet calling address to a contact to be able to place an internet call to them.

To make an internet call, from the *Application menu* tap **People**. Tap on the contact to open their profile, and then tap on their internet calling address to place the call.

Note

Many modern internet calling apps automatically "connect" to any of your Android contacts who also have that service. Any connected services will be listed under "connections" in the contact's profile.

Calling a phone number using internet calling

If you have configured your phone to place all calls using internet calling or to ask for each call, you may also call a phone number using internet call, whenever you are connected to a wireless network.

Dial the number and tap , or select the contact you wish to place a call to, then tap the internet call account you want to use to make the call.

Important

Calling a phone number using internet calling requires that your service provider supports it, and may incur additional charges. Please contact your service provider if you have any questions.

Downloaded from www.Manualslib.com manuals search engine

- For bottling, use only commercially available bottling jars (jars with rubber rings and glass lids). Never use jars with screw fittings or bayonet catches or metal tins. And make sure you use fresh foodstuffs!
  The oven holds 6 bottling jars of 1-1½ litres capacity.
  Place 1 cup of hot water in the drip-pan so that the necessary humidity is retained in the oven.
- As the **shelf height,** use the 4th level from above. The jars should not touch, must wherever possible be filled to the same level with the same contents, and must be securely clamped.
- To **switch on,** turn my heating mode switch to hot air and the oven temperature switch to 160 °C.
- **Fume opening: closed**
- **Keep an eye** on the food being bottled.
  As soon as the liquid in the first jars (when bottling **fruit** or **pickled cucumbers**) **begins** to bubble (after around 45 minutes for 1-litre jars) switch off the oven, but allow the jars to stand a further 30 minutes or so – around 15 minutes for tender fruit, e.g. strawberries – in the closed oven.
  When bottling **vegetables** or **meat,** set back my oven temperature switch to 100 °C as soon as the liquid in the first jars **begins** to bubble and allow the contents to **cook** for a further 60-90 minutes. Then switch off the oven with both my switches and allow the jars to stand a further 30 minutes in the closed oven.

Downloaded from www.Manualslib.com manuals search engine

Troubleshooting guide

Before requesting service, make the following checks. If you are in doubt about some of the check points, or if the solutions indicated in the following guide do not solve the problem, consult your dealer for instructions.

Power

No power.

Insert the AC mains lead securely. (⇨ 10)

The unit is automatically switched to standby mode.

The Sleep timer was working and had reached the set time limit. (⇨ 38)

Unit displays

The display is dark.

Select "BRIGHT" in "FL DIMMER" in the OTHERS menu. (⇨ 29)

"NO PLAY"

- You inserted a disc the unit cannot play; insert one it can. (⇨ 30)
- You inserted a blank disc.
- You inserted a disc that has not been finalized.

"NO DISC"

- You have not inserted a disc; insert one.
- You have not inserted the disc correctly; insert it correctly. (⇨ 16)

"OVER CURRENT ERROR"

The USB device is drawing too much power. Switch to DVD/CD mode, remove the USB and turn the unit off.

"IPOD OVER CURRENT ERROR"

The iPod is drawing too much power. Remove the iPod, and turn the unit off and on again.

"F61"

Check and correct the speaker cable connections. If this does not fix the problem, consult the dealer. (⇨ 7)

"F76"

There is a power supply problem. Consult the dealer.

"DVD U11"

Disc may be dirty. Wipe it clean. (⇨ 31)

"ERROR"

Incorrect operation performed. Read the instructions and try again.

"DVD H□□"

"DVD F□□□"

□ stands for a number.

- Trouble may have occurred. The numbers following "H" and "F" depend on the status of the unit. Turn the unit off and then back on. Alternatively, turn the unit off, disconnect the AC mains lead, and then reconnect it.
- If the service numbers fail to clear, note the service number and contact a qualified service person.

" W1 " is flashing or does not light.

- There is no link between the main unit and the wireless system. Check that the wireless system is plugged into the household mains socket and is turned on. (⇨ 10)
- Ensure that the digital transmitter is fully inserted into the slot of the main unit. (⇨ 7)

"U70□"

□ stands for a number. (The actual number following "U70" will depend on the state of the main unit.)

- The HDMI connection acts unusually.
  - The connected equipment is not HDMI-compatible.
  - Please use HDMI cables that have the HDMI logo (as shown on the cover).
  - The HDMI cable is too long.
  - The HDMI cable is damaged.

"REMOTE 1" or "REMOTE 2"

Match the modes on the main unit and remote control. Depending on the number being displayed ("1" or "2"), press and hold [OK] and the corresponding numbered button ([1] or [2]) for at least 2 seconds. (⇨ 38)

"LOADING"

- The iPod is not ready. Wait for this display to disappear.
- Disconnect the iPod, and then reconnect it firmly. (⇨ 25)

"NO MIC"

The Auto speaker setup microphone is not inserted. Check whether the Auto speaker setup microphone is plugged in properly into the SETUP MIC jack.

"NOISY"

Excessive ambient noise in the room. Perform the setup again and keep quiet during the Auto speaker setup.

General operation

No response when any buttons are pressed.

- This unit cannot play discs other than the ones listed in these operating instructions. (⇨ 30)
- The unit may not be operating properly due to lightning, static electricity or some other external factor. Turn the unit off and then back on. Alternatively, turn the unit off, disconnect the AC mains lead, and then reconnect it.
- Condensation has formed. Wait 1 to 2 hours for it to evaporate.

No response when remote control buttons are pressed.

- Check that the batteries are installed correctly. (⇨ 10)
- The batteries are depleted. Replace them with new ones. (⇨ 10)
- Aim the remote control at the remote control signal sensor and operate. (⇨ 39)

Other products respond to the remote control.

Change the remote control operating mode. (⇨ 38)

No picture or sound.

- Check the video or speaker connection. (⇨ 7, 8)
- Check the power or input setting of the connected equipment and the main unit.
- Check that the disc has something recorded on it.

You have forgotten your ratings password.

Reset all the settings to Factory Preset.
While stopped and "DVD/CD" is the source, press and hold [■] (Stop) on the main unit and [≧10] on the remote control until "INITIALIZED" disappears from the TV. Turn the unit off and on again.
All settings will return to the default values.
(This does not work during program and random modes, or when setup menu or START menu is displayed.)

Some characters are not displayed correctly.

Characters other than English alphabet and Arabic numerals may not be displayed correctly.

The VIERA Link "HDAVI Control" function does not respond.

Depending on the condition of this unit or the connected equipment, it may be necessary to repeat the same operation so that the function can work correctly. (⇨ 22)

The setting you made in "TV ASPECT" (⇨ 27, VIDEO menu) or "LANGUAGE" (⇨ 28, DISPLAY menu) does not work.

The settings for "TV ASPECT"×1 and "LANGUAGE"×2 will automatically follow the information from the TV. (⇨ 11, Smart setup settings)

×1 When using VIERA Link "HDAVI Control" with "HDAVI Control 3 or later" compatible TV

×2 When using VIERA Link "HDAVI Control" with "HDAVI Control 2 or later" compatible TV

Disc operation

It takes time before play starts.

- Play may take time to begin when an MP3 track has still picture data. Even after the track starts, the correct play time will not be displayed. This is normal. MP3
- This is normal on DivX video. DivX

A menu screen appears during skip or search. VCD

This is normal for Video CDs.

Playback control menu does not appear.

VCD with playback control

Press [■ STOP] twice and then press [▶ PLAY].

Reference

RQTX0234

Downloaded from www.Manualslib.com manuals search engine

GRABACION CON EDICION PROGRAMADA

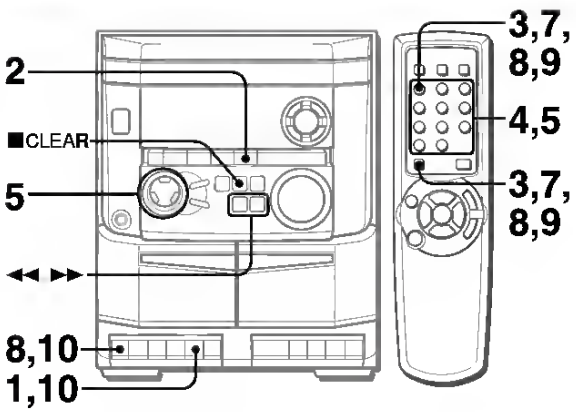

En la función de grabación con edición programada, las canciones pueden programarse mientras se comprueba el tiempo restante de cada cara de la cinta.

1 **Inserte la cinta en la platina 1 y bobínela hasta el comienzo de la cara frontal.**
Pulse ■/≜ para abrir el portacasete e insertar la cinta con la cara que vaya a grabar en primer lugar hacia fuera de la unidad. Bobine la cinta con ◄◄.

2 **Pulse CD e introduzca el(los) disco(s).**

3 **Pulse dos veces CD EDIT/CHECK mientras pulsa SHIFT del control remoto.**
"EDIT" y "PRGM" se visualizarán.
• Cuando se visualice "AI", pulse **CD EDIT/CHECK** mientras pulsa de nuevo **SHIFT**.

4 **Pulse los botones numerados 0-9 del control remoto para designar la duración de la cinta.**
Se puede especificar una duración de 10 a 99 minutos.
• ◄◄ y ►► también puede utilizarse para designar la duración de la cinta.

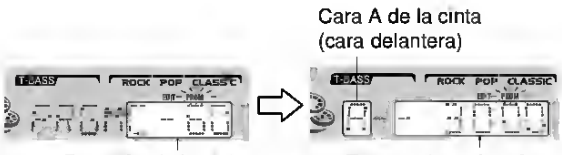

5 **Pulse DISC DIRECT PLAY 1-3 para seleccionar un disco.**
Luego, pulse los botones numerados 0-9 y +10 del control remoto para programar una canción.
Ejemplo: Para seleccionar la canción número 10 del disco 2, pulse **DISC DIRECT PLAY 2**, y luego pulse **+10** y **0**.

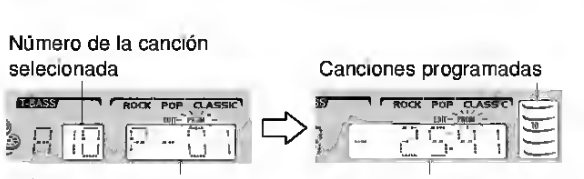

6 **Repita el paso 5 para el resto de las canciones para la cara A.**
Una canción cuyo tiempo de reproducción sea superior al tiempo restante no podrá ser programada.

7 **Pulse CD EDIT/CHECK mientras pulsa SHIFT del control remoto para seleccionar la cara B y programe las canciones para la cara B.**
Despues de confirmar que "B" aparezca en el visualizador, repita el paso 5.

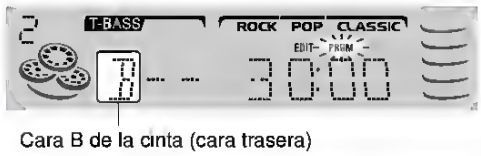

Cara B de la cinta (cara trasera)

8 **Pulse CD EDIT/CHECK mientras pulsa SHIFT del control remoto para seleccionar la cara A y pulse ● para iniciar la grabación.**
La reproducción del disco compacto y la grabación de los temas editados para la primera cara comienzan simultáneamente. Una vez que la cinta llega al final, la platina 1 entra en el modo de parada de grabación. A continuación, vaya al paso 9.

9 **Pulse CD EDIT/CHECK mientras pulsa SHIFT del control remoto para grabar la segunda cara.**
Se visualiza "B".

10 **Dé la vuelta a la cinta de la platina 1 y pulse ● para iniciar la grabación.**
Empieza la grabación.

Para detener la grabación
Pulse ■/≜ de la platina 1. La grabación y la reproducción del disco compacto pararán simultáneamente.

Para comprobar el orden de los números de las canciones programadas
Antes de grabar, pulse **CD EDIT/CHECK** mientras pulsa **SHIFT** del control remoto para seleccionar la cara A o la B, y pulse repetidamente ◄◄ o ►►.

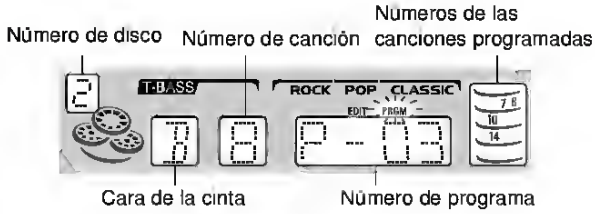

Para cambiar el programa de cada cara
Pulse **CD EDIT/CHECK** mientras pulsa **SHIFT** del control remoto para seleccionar la cara A o B, y pulse ■ **CLEAR** para borrar el programa de la cara seleccionada. Luego vuelva a programar canciones.

Para borrar el programa de edición
Pulse ■ **CLEAR** dos veces para que "EDIT" desaparezca del visualizador.

NOTA
• Se puede programar un máximo de 30 canciones de cualquiera de los discos insertados.
• "FULL" se visualizará si usted intenta programar más de 30 canciones.

Downloaded from www.Manualslib.com manuals search engine

The image is too blurred.	Please adjust the focus (see page 8).
The image on is too dark.	You may need to take pictures or movies in the place with adequate light or use the flash strobe.
Sound playback is not available when viewing the movie on the LCD display.	This situation is normal. If you want the movie with sound playback, please copy the movie to your computer and view it on the computer.
Noise occurs on my camera when viewing the image on the LCD display or on the computer.	Set the filter matching the place you are. Please refer to the "More on flicker" section on page 33.
☞ When connecting the camera to your computer	
The driver installation failed.	❶ Please remove the driver and other related programs. Follow the installation steps in this manual to reinstall. ❷ Install the driver before inserting the USB cable.
A conflict with other installed camera or capture device.	If you have any other camera or capture device, completely remove the camera and its driver form the computer to avoid a driver conflict.
The movie cannot be played on my computer.	Please install DirectX 8.0 or above. (See the "Installing the PocketCam X driver" section on page 17 or download DirectX 8.0 and get more information on Microsoft website.)
Noise occurs on my computer when using Video Conferencing.	Set the filter matching the place you are. Please refer to the "Banding Filter" section on page 29.

Downloaded from www.Manualslib.com manuals search engine

Canceling the Protection

To cancel protection for only one image, display the image that you want to remove the image protection.

1. Select [Protect] with the ▲ / ▼ buttons from the playback menu, and press the **SET** button.
2. Select [Single] or [All] with the ▲ / ▼ buttons, and press the **SET** button.
3. Select [Cancel Protect] with the ▲ / ▼ buttons, and press the **SET** button.
   - The removal of image protection is executed and the camera returns to the playback mode.

Protecting multiple images simultaneously

1. Select [Protect] with the ▲ / ▼ buttons from the playback menu, and press the **SET** button.
2. Select [Select] with the ▲ / ▼ buttons, and press the **SET** button.
   - The images are displayed in the thumbnail display.
3. Select the image you want to protect with the ▲ / ▼ / ◀ / ▶ buttons, and press the |▢| button.
   - The protect icon [ ] is displayed with protected images. Selecting a protected image and pressing the |▢| button again will cancel the protection. This procedure is repeated to select multiple images.
4. Press the **SET** button.
   - Protection and cancellation the protection are executed and the camera returns to playback mode.

- Formatting an SD memory card overrides protection, and erases all images regardless of their protected status.

Downloaded from www.Manualslib.com manuals search engine

MAIN MENU SELECTIONS

System Status Screen

The screen in **Figure 3-1** displays the status of major system components. This is a status screen only; no configurations can be performed. More detailed information can be obtained by way of the Main Menu (Figure 3-2).

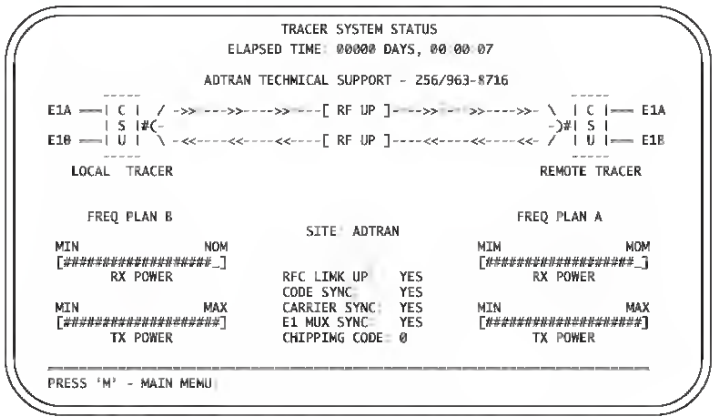

Figure 3-1. System Status Screen

The upper portion of the screen indicates how long the system has been running since the last reset operation. The "E1A" and "E1B" labels will be highlighted if any error conditions exist on that E1 interface.

The status of the radio link is indicated as Up or Down. The left portion of the screen reports the status of the local system (the system to which the terminal is attached); the right portion reports the status of the remote system. The approximate transmitter and receiver signal levels are shown via the bar graphs. If the link is down and remote end data is unavailable, the bar graphs will show "-" instead of "x." RFC Link Up indicates if communications exist on the IF cable connecting the baseband processor to the radio frequency converter. The Code Sync, Carrier Sync, and E1 Mux Sync will all be "yes" for an operational link. Chipping code indicates the code to which the system is set.

Downloaded from www.Manualslib.com manuals search engine

REMOTE

The remote loopback causes a V.54 code to be sent to the far end. The Nx at the far end activates a PORT/ LCL loopback on detection of the V.54 code.

REM V.54 CONT

This loopback causes continuous V.54 code to be sent to the far end. The Nx at the far end activates a **PORT/LCL** loopback upon detection of the V.54 code.

OFF

The loop is deactivated.

The TSU/TDU/ESU checks the remote loopback activation by detecting a proper response from the remote end. While waiting for the response, the display shows ***Looping****. If successful, the display changes to* ***Looped Up****. If unsuccessful, the display shows* ***Failed****.*

511 PATT

Activates the generation of the 511 test pattern.

ON

The pattern check circuitry is enabled and test started. The test is ended by selecting **OFF**.

OFF

The pattern generation and check is disabled

DIS 511 RESLT

Displays the results of the 511 test indicated above. The results are in the form of the number of errored seconds. The error count can be cleared by pressing the **Clear** key (**Shift + 9**). A bit error may be inserted into the data stream by pressing the **2** key.

Downloaded from www.Manualslib.com manuals search engine

10.2. Block (1/4) Diagram

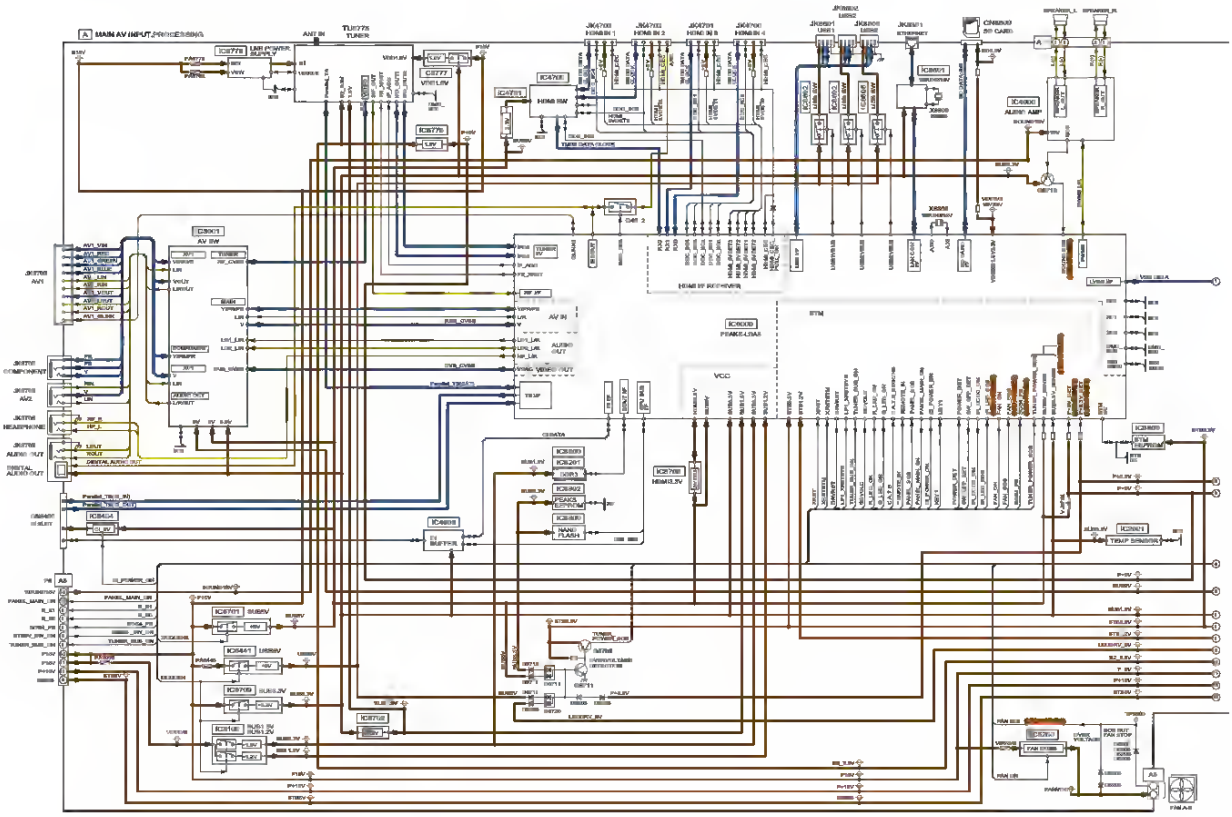

Downloaded from www.Manualslib.com manuals search engine

How to use the Rotation Control

In rare cases the video supplied to the TV screen might show slightly tilted one way or another. The Tilt Adjust control will allow you to correct the problem by adjusting the screen in a clockwise or counterclockwise direction.

1 **Press the MENU button** on the remote control to show the on-screen menu.

2 **Press the CURSOR DOWN button** until FEATURES is highlighted.

3 **Press the CURSOR RIGHT button** and the menu will shift to the left.

4 **Press the CURSOR DOWN button** repeatedly until the ROTATION control is highlighted.

5 **Press the CURSOR RIGHT or LEFT button** to rotate the picture on the screen clockwise or counter clockwise. Please note that the amount of rotation will be very minimal.

6 **Press the STATUS/EXIT button** to remove the menu from the screen.

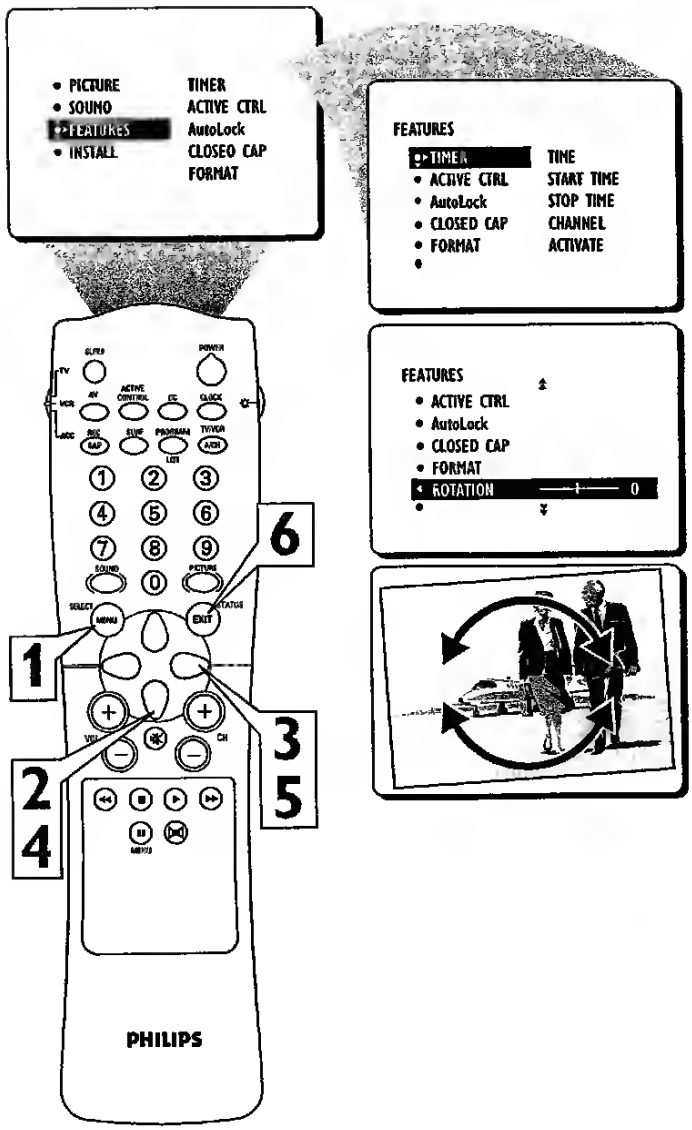

IMPORTANT NOTE:

The ROTATION Control is generally used on 32" screen size and larger televisions. If you have a smaller screen size and your set does not have the Rotation Control, this is normal.

Downloaded from www.Manualslib.com manuals search engine

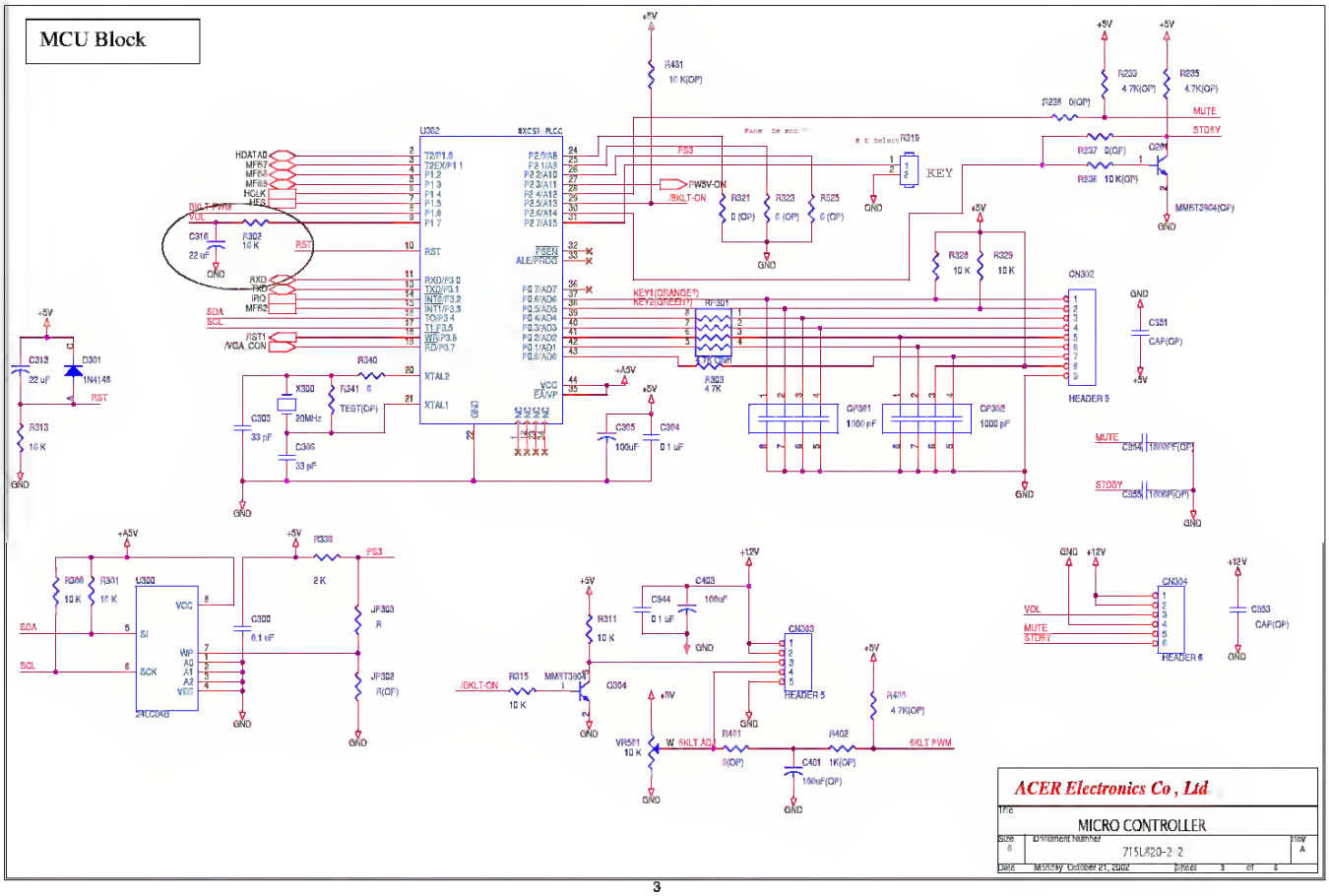

Downloaded from www.Manualslib.com manuals search engine

8.6 ACER_LCD_G24_SCHEMATICS_INTERFACE_BD_HDMI AND DVI INPUT

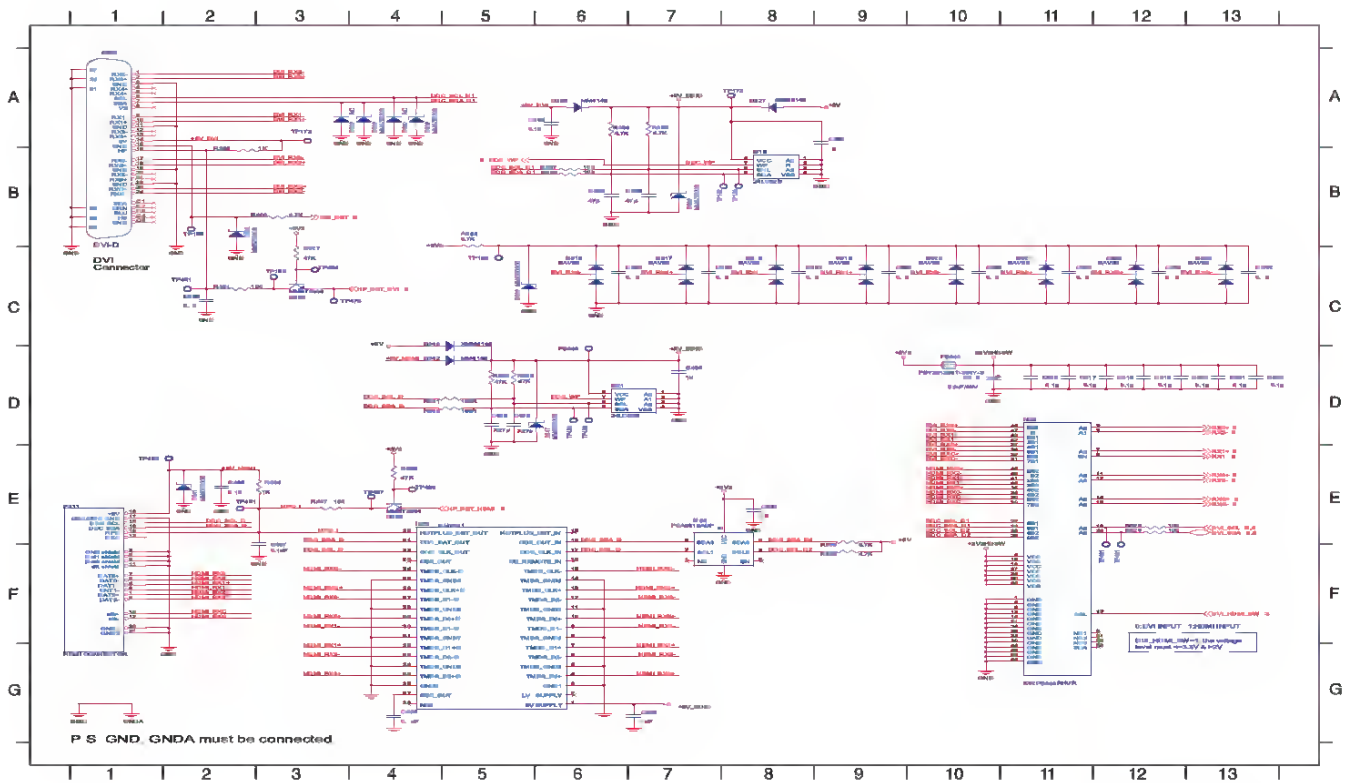

PCB No 6832194600P0

Downloaded from www.Manualslib.com manuals search engine

Downloaded from www.Manualslib.com manuals search engine

- De hot-pluggable PCI-deurtjes bieden toegang tot gevaarlijke energiecircuits.
  - De deurtjes moeten tijdens normaal gebruik gesloten blijven
    -of-
  - De server moet worden geïnstalleerd in een ruimte met beveiligde toegang waar uitsluitend daarvoor opgeleide technici toegang tot de server hebben.
- Schakel de apparatuur uit en maak alle netsnoeren los voordat u afdekplaatjes voor niet-hot-pluggable gebieden verwijdert.
- Vervang geen niet-hot-pluggable onderdelen terwijl het product van stroom wordt voorzien. Schakel eerst de netvoeding voor het product uit en maak alle etsnoeren los de documentatie bij het product.
- Alle procedures voor reparatie en voor het oplossen van problemen zijn slechts gedetailleerd tot subconstructie- of moduleniveau zodat alleen reparaties tot dat niveau mogelijk zijn. Gezien de complexiteit van de afzonderlijke kaarten en subconstructies, mag u geen reparaties op componentniveau uitvoeren of wijzigingen aanbrengen in printplaten. Verkeerd uitgevoerde reparaties kunnen gevaarlijke situaties veroorzaken.
- Bevestig stabilisatievoetjes aan producten die op de grond staan en zet de voetjes uit voordat u opties en kaarten installeert.
- Controleer of de netvoedingsaansluiting waarop het rack is aangesloten, niet overbelast is. Hierdoor vermindert u het risico op persoonlijk letsel, brand of beschadiging van de apparatuur. De totale belasting van het rack mag niet hoger zijn dan 80 procent van de spanning van het spanningscircuit. Raadpleeg uw energiebedrijf voor informatie over bekabelings- en installatievereisten.

Voorzorgsmaatregelen voor netsnoeren, voedingsbronnen en bijbehorende producten

Netsnoeren

Voer de onderstaande voorzorgsmaatregelen uit om het risico op elektrische schokken of beschadiging van de apparatuur te vermijden:

- Gebruik een goedgekeurd netsnoer.
- Als er geen netsnoer is geleverd bij uw computer of bij een optie die op netvoeding werkt, dient u een netsnoer aan te schaffen dat is goedgekeurd voor gebruik in uw land.
- Het netsnoer moet geschikt zijn voor de spanningsvereisten van het product en voor het voltage en de netspanning die zijn aangegeven op het label met elektrische spanningswaarden dat zich op het product bevindt. Het snoer moet geschikt zijn voor een hoger voltage en een hogere spanning dan op het product vermeld staat.
- Als u vragen heeft over het type netsnoer dat u moet gebruiken, neemt u contact op met een geautoriseerde HP Service Provider.
- Plaats geen voorwerpen op netsnoeren of voedingskabels. Leid snoeren en kabels zodanig dat niemand er per ongeluk op kan trappen of erover kan struikelen.
- Trek niet aan een snoer of kabel. Trek alleen aan de stekker als u een snoer van een stopcontact wilt losmaken.
- Zorg ervoor dat het totale aantal ampères van alle producten die op een verlengsnoer of stekkerdoos zijn aangesloten, niet meer dan 80 procent bedraagt van de maximaal toelaatbare belasting van het verlengsnoer of de stekkerdoos.
- Gebruik de geaarde stekker van het netsnoer. De randaarde is een belangrijke veiligheidsvoorziening.
- Sluit het netsnoer aan op een geaard stopcontact dat altijd gemakkelijk bereikbaar is.

Voedingsbronnen

- Hot-pluggable voeding is niet geschikt om verwijderd of geïnstalleerd te worden terwijl netvoeding wordt gebruikt. U kunt als volgt elektrische schokken of beschadiging van de apparatuur vermijden bij het gebruik van hot-pluggable voeding:
  - Installeer de voeding alvorens de stekker van het netsnoer in het stopcontact te steken.
  - Haal de stekker uit het stopcontact voordat u de voeding uit het product verwijdert.
  - Als het systeem met verschillende voedingsbronnen is uitgerust, moet u de stekkers van alle netsnoeren uit het stopcontact halen om de netvoeding van het systeem geheel uit te schakelen.

Downloaded from www.Manualslib.com manuals search engine

Fig. 7.11

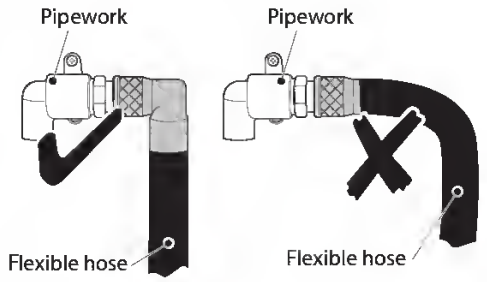

Fig. 7.12

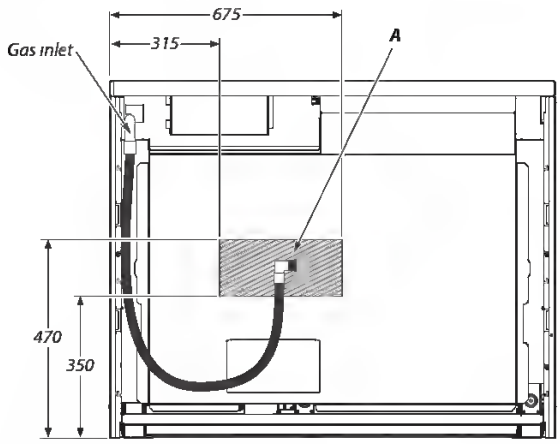

All dimensions in millimetres

Gas Connection

This must be in accordance with the relevant standards.

The flexible hose (not supplied with the cooker) must be in accordance with the relevant standards. Hoses may be purchased at most builders' merchants.

We recommend that a Micropoint gas hose is used when installing this appliance.

The gas supply needs to terminate with a down facing bayonet (**Fig. 7.11**).

The connector is located just below the hotplate level at the rear of the cooker. If in doubt contact your supplier.

The rear cover boxes limit the position of the supply point.

Because the height of the cooker can be adjusted and each connection is different, it is difficult to give precise dimensions.

Although a 900 mm hose can be used, a 1100 mm hose will allow slightly more flexibility in the positioning of the bayonet and make moving the cooker easier.

The hose should be fitted so that both inlet and outlet connections are vertical so that the hose hangs downwards in a 'U' shape.

Ideally the hose supply connection should be within the shaded area 'A' (**Fig. 7.12**).

For Natural Gas, the flexible hose must be in accordance with BS 669. For LP Gas, it should be capable of 50 mbar pressure and 70 °C temperature rise. If in doubt contact, your supplier.

Screw connect the threaded end of the hose into the gas inlet.

After completing the gas connection, make sure that the cooker is gas sound with a pressure test.

Pressure Testing

The gas pressure can be measured at one of the hotplate burner injectors (not the wok burner).

Lift off a burner head. Fit the pressure gauge to the injector. Turn on and light one of the other hotplate burners.

Turn on the control knob for the burner with the pressure gauge fitted to let gas through.

See the data badge for test pressures.

Turn off the burners. Make sure that you reassemble the burner top in the correct way on the burner body.

4.5 Board layout: jumper/connector locations

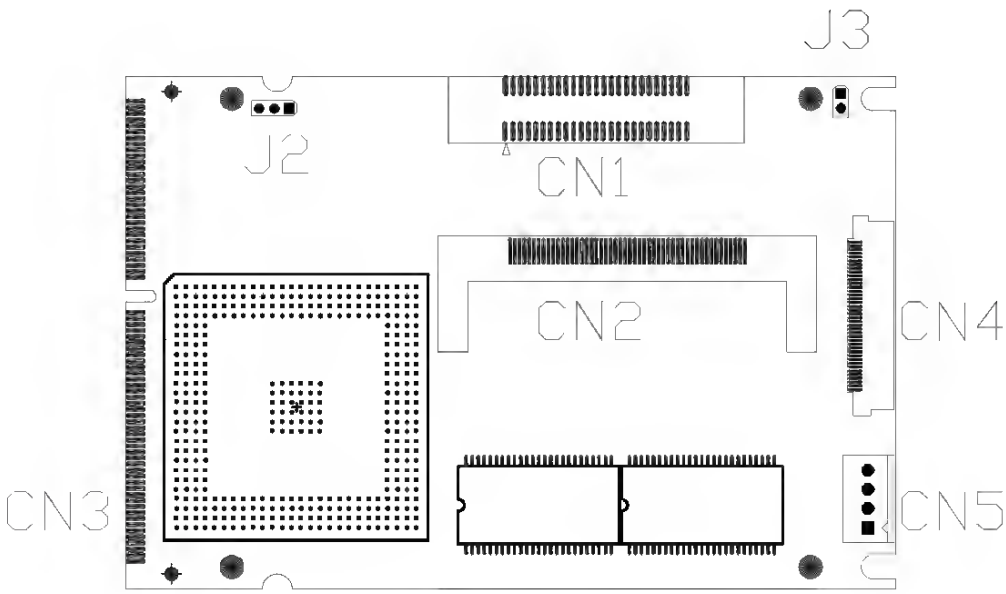

Figure 4-1: Board layout: jumper/connector locations

Downloaded from www.Manualslib.com manuals search engine

C.11 Board ID — BASE+28H

The PCI-1784 offers Board ID register BASE+28H. With correct Board ID settings, user can easily identify and access each card during hardware configuration and software programming.

Table C-10 PCI-1784 Board ID data

Base Addr.		15	14	13	12	11	10	9	8	7	6	5	4	3	2	1	0
		31	30	29	28	27	26	25	24	23	22	21	20	19	18	17	16
28H	R	Board ID															
		0	0	0	0	0	0	0	0	0	0	0	0	BD3	BD2	BD1	BD0
		0	0	0	0	0	0	0	0	0	0	0	0	0	0	0	0

BD3 ~ DB0 **Board ID**

BD0 LSB of the Board ID

BD3 MSB of the Board ID

BD3	BD2	BD1	BD0	Board ID
1	1	1	1	15
1	1	1	0	14
1	1	0	1	13
1	1	0	0	12
1	0	1	1	11
1	0	1	0	10
1	0	0	1	9
1	0	0	0	8
0	1	1	1	7
0	1	1	0	6
0	1	0	1	5
0	1	0	0	4
0	0	1	1	3
0	0	1	0	2
0	0	0	1	1
0	0	0	0	0

Downloaded from www.Manualslib.com manuals search engine

MEZCLA MICROFONICA

A esta unidad podrán conectarse dos micrófonos (no suministrados), permitiéndole así cantar con el acompañamiento de las fuentes musicales.
Utilice un micrófono con miniclavija (3,5 mm ø).

Antes de conectar un micrófono
Ponga el control MIC MIXING en MIN

***1* Conecte su micrófono a la toma MIC.**

***2* Pulse uno de los botones de función para seleccionar la fuente de sonido que vaya a ser mezclada y luego reprodúzcala.**

***3* Ajuste el volumen y el tono de la fuente de sonido.**

***4* Ajuste el volumen del micrófono con el control MIC MIXING.**
El volumen de ambos micrófonos se ajustará al mismo tiempo.

***5* Ajuste el eco con el control DIGITAL ECHO.**

Para grabar el sonido de micrófono mezclado con el sonido de la fuente
Siga el procedimiento de grabación de la fuente de sonido (páginas 35 a 37).
El botón SYNCHRO DUBBING no se podrá utilizar para grabar la mezcla.

Cuando no utilice los micrófonos
Ponga los controles MIC MIXING y DIGITAL ECHO en MIN y desconecte los micrófonos de las tomas MIC.

NOTA

- Cuando se utilice un micrófono conectado, el sistema DSP SURROUND se desactivará automáticamente.
- Si el micrófono se pone demasiado cerca de los altavoces quizá se produzca un ruido de aullido. En este caso, separe el micrófono de los altavoces o disminuya el nivel del sonido empleando el control MIC MIXING.
- Si el sonido del micrófono se pone a un nivel demasiado alto quizá se distorsione. En este caso, gire el control MIC MIXING hacia MIN.

Micrófono recomendado
Se recomienda utilizar un micrófono tipo unidireccional para evitar el aullido. Póngase en contacto con su concesionario Aiwa para que le de los detalles.

MIXAGE AVEC MICROPHONE

Pour chanter avec accompagnement par une source musicale, on peut brancher deux microphones (pas fournis) à cet appareil. Utiliser un (des) microphone(s) à mini-fiche (3,5 mm ø).

Avant de brancher un microphone
Régler la commande MIC MIXING sur MIN.

***1* Brancher le microphone à une prise MIC.**

***2* Appuyer sur une des touches de fonction pour sélectionner la source à mixer, et mettre cette source en marche.**

***3* Régler le volume et la tonalité de la source.**

***4* Régler le volume du microphone avec la commande MIC MIXING.**
Le volume des deux microphones est réglé en même temps.

***5* Régler l'écho avec la commande DIGITAL ECHO.**

Pour enregistrer le son de son de microphone mixé avec la source sonore
Suivre la procédure d'enregistrement à partir de la source (pages 35 à 37).
La touche SYNCHRO DUBBING ne peut pas être utilisée pour l'enregistrement de mixage.

Quand on n'utilise pas les microphones
Régler les commandes MIC MIXING et DIGITAL ECHO sur MIN et débrancher les microphones des prises MIC.

REMARQUE

- Quand un microphone connecté est utilisé, le système DSP SURROUND est automatiquement mis hors service.
- Si un microphone est placé trop près d'une enceinte, un bruit de hurlement risque de se produire. Le cas échéant, éloigner le microphone de l'enceinte ou baisser le niveau sonore à l'aide de la commande MIC MIXING.
- Si le son d'un microphone est extrêmement fort, il peut être déformé. Le cas échéant, tourner la commande MIC MIXING vers MIN.

Microphone recommandé
L'utilisation d'un microphone de type unidirectionnel est recommandée pour éviter le hurlement. Pour plus de détails, contacter le distributeur Aiwa local.

Downloaded from www.Manuatstib.com manuals search engine

Step 4 If you have not previously set this printer as the default printer, your computer will prompt you for a PostScript Printer Description file. Choose **Select PPD**.

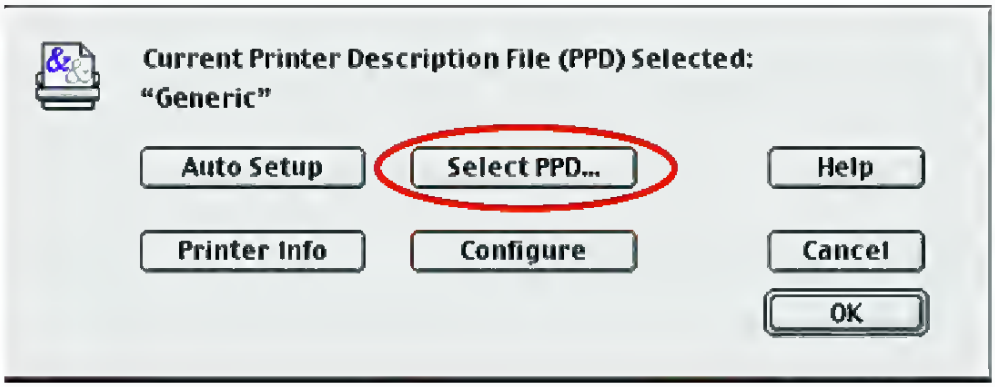

Step 5 Select the appropriate printer description file for your printer. Click **Open**. (If your printer is not listed, click **Generic** to use a generic printer description).

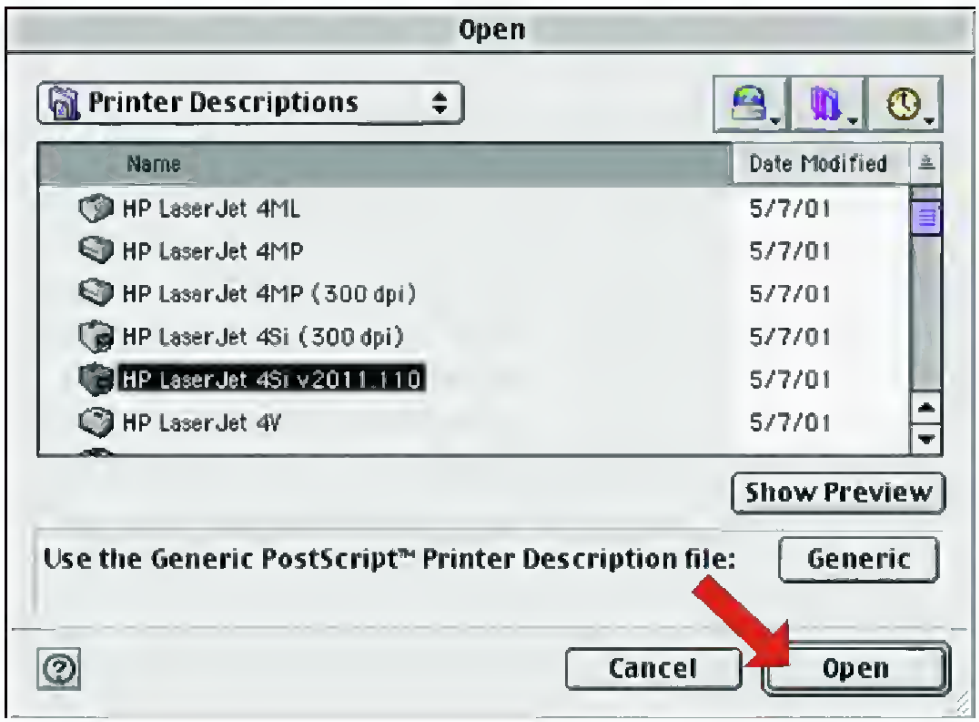

The selected printer will become your computer's default printer. You may need to choose **Page Setup** in any application you have opened.

Downloaded from www.Manualslib.com manuals search engine

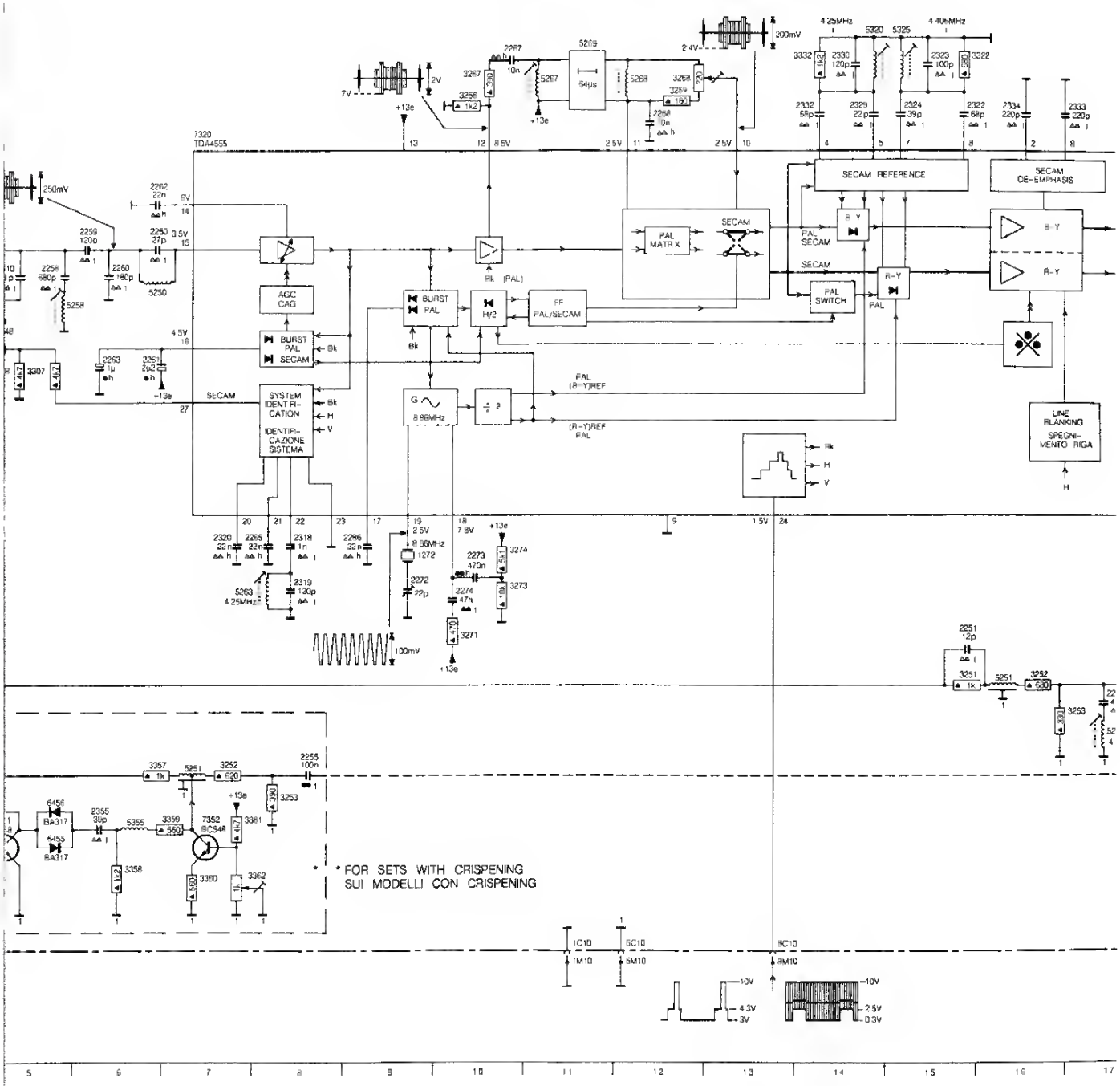

For Service Manuals
MAURITRON SERVICES
8 Cherry Tree Road, Chinnor
Oxfordshire, OX9 4QY.
Tel (01844) 351694
Fax (01844) 352554
email:- sales@mauritron.co.uk

Downloaded from www.Manualslib.com manuals search engine

REGLAGE DE LA BALANCE DU NIVEAU DES ENCEINTES

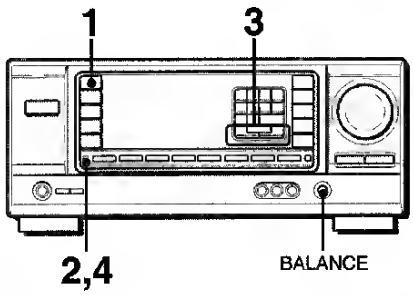

L'ampli-tuner intègre un générateur de signaux d'essai appelé séquenceur de bruit pour faciliter le réglage de la balance des quatre canaux.
Le séquenceur fournit un signal qui passe d'un canal à l'autre, permettant ainsi d'effectuer simplement un réglage du niveau sonore pour obtenir le même niveau apparent pour chaque canal à la position d'écoute.

1 Sélectionnez le mode Dolby Pro Logic en fonction de la configuration actuelle des enceintes.
(Voir page 12)

2 Appuyez sur la touche MANUAL SELECT et tenez-la enfoncée pendant environ deux secondes jusqu'à ce que "L TEST" apparaisse.

Un signal est envoyé à chaque canal dans l'ordre suivant:

Mode DOLBY PRO LOGIC NORMAL ou WIDE

L TEST: (enceinte gauche) → TEST R: (enceinte droite) → SUR: (enceinte surround) → CEN: (enceinte centrale) → L TEST

Mode DOLBY PRO LOGIC PHANTOM

L TEST → TEST R → SUR → L TEST

Mode 3CH LOGIC NORMAL ou WIDE

L TEST → TEST R → CEN → L TEST

3 Ajustez le niveau sonore de l'enceinte centrale et (ou) des enceintes surround.
Quand "CEN" ou "SUR" est affiché, appuyez sur la touche UP▲ ou DOWN▼ pour ajuster le volume des enceintes centrale ou surround en fonction du niveau des enceintes avant gauche et droite.

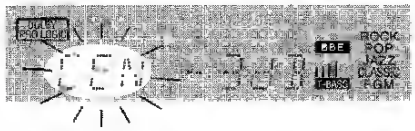

Pour ajuster la balance des enceintes gauche et droite, utilisez la commande BALANCE quand "L TEST" ou "TEST R" est affiché.

4 Appuyez une nouvelle fois sur la touche MANUAL SELECT pour arrêter le signal.

REMARQUE

Si vous changez le volume des enceintes surround du mode DSP (voir page 8), celui des enceintes surround dans le mode Dolby Pro Logic change aussi.

A propos des canaux
Les enceintes gauche et droite créent l'effet stéréo.
L'enceinte centrale permet d'obtenir un positionnement plus précis du son sur un large champs sonore.
Les enceintes surround arrière eugmentent la "profondeur" du champ sonore.

Pour changer le temps de retard
Les enceintes surround reproduisent le son une fraction de seconde après les enceintes avant. Le retard est initialement réglé sur 20 ms (millisecondes).
Pour changer le temps de retard standard, appuyez deux ou trois fois sur la touche MANUAL SELECT pour que "TIME" soit affiché. Appuyez ensuite sur UP▲ ou DOWN▼. A chaque pression sur une de ces touches, le temps de retard chenge comme suit.

20ms ⟷ 30ms

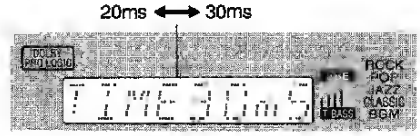

Pour changer le niveau sonore après avoir ajusté la balance avec le séquenceur de bruit
Vous pouvez régler le niveau sonore des enceintes centrale et surround pendant qu'un disque laser ou une vidéo est reproduit.

1 Appuyez une ou deux fois sur la touche MANUAL SELECT pour sélectionner "CEN" ou "SUR" (centre ou surround).
2 Quand "CEN" ou "SUR" est affiché, appuyez sur UP▲ ou DOWN▼ pour ajuster le volume.

Downloaded from www.Manualslib.com manuals search engine

- earphones, headphones: connect to the Headphone-out port (lime port) located on the front panel of your computer

Note: To adjust the volume of the headphones, click on the Volume icon located on the taskbar at the bottom of your screen. When the volume control pops up, drag the volume control lever to the desired level.

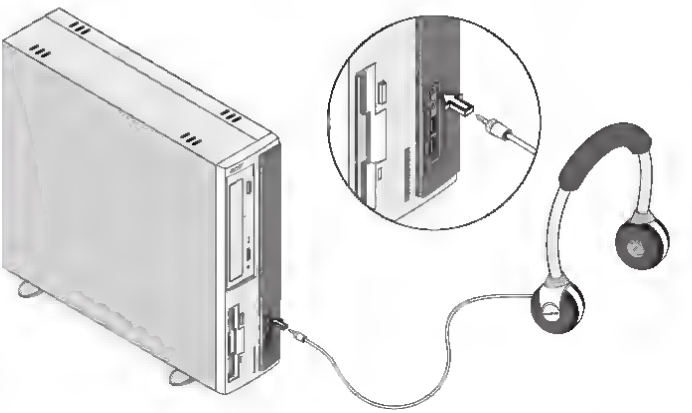

- speakers: connect to the Audio-out/Line-out jack (lime jack) located on the rear panel of your computer

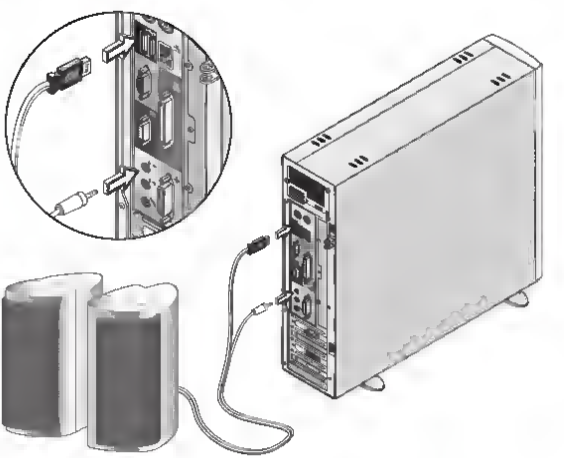

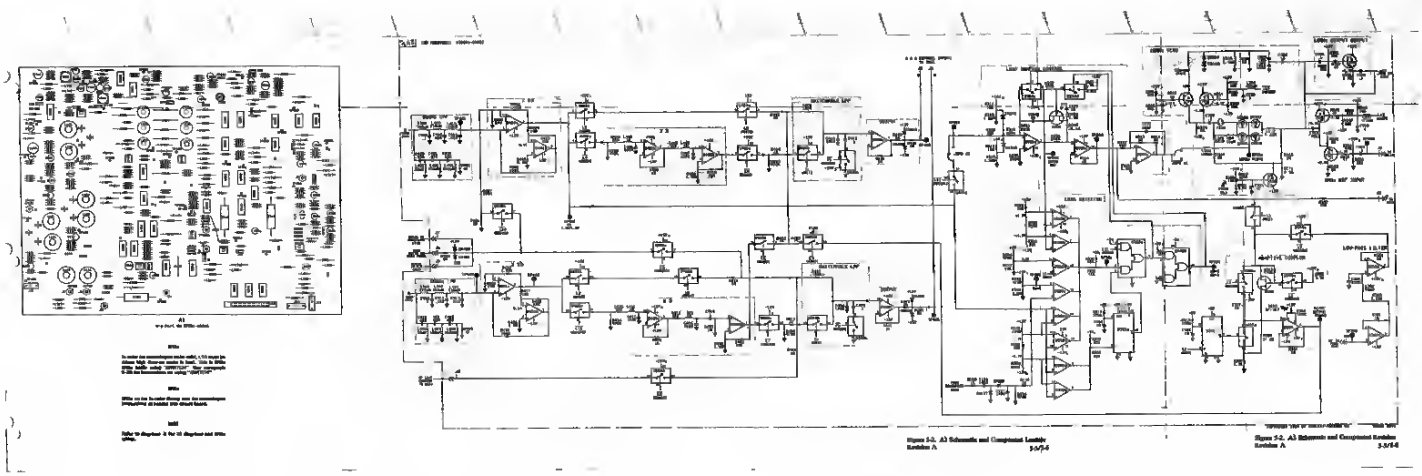

Downloaded from www.Manualslib.com manuals search engine

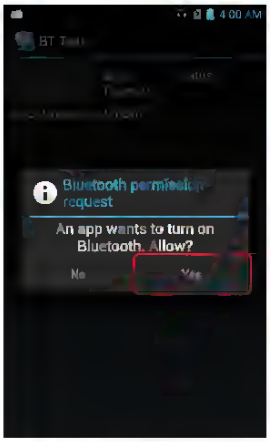

- Tap "Scan BT Device" to start BT test.
- Pass Criteria：anyone of the RSSI is over -69dBm

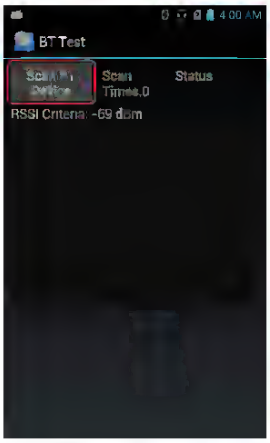

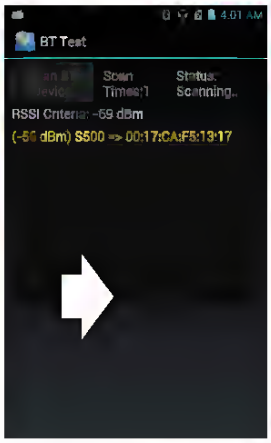

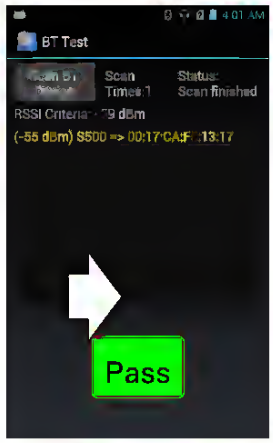

NFC：test NFC Read Mode.

- Check if the battery cover is assembled.
- Tap "NFC Read Mode" to enable the function.
- Tap "Accept" to start test.

Downloaded from www.Manualslib.com manuals search engine

Preparation, kitchen furniture

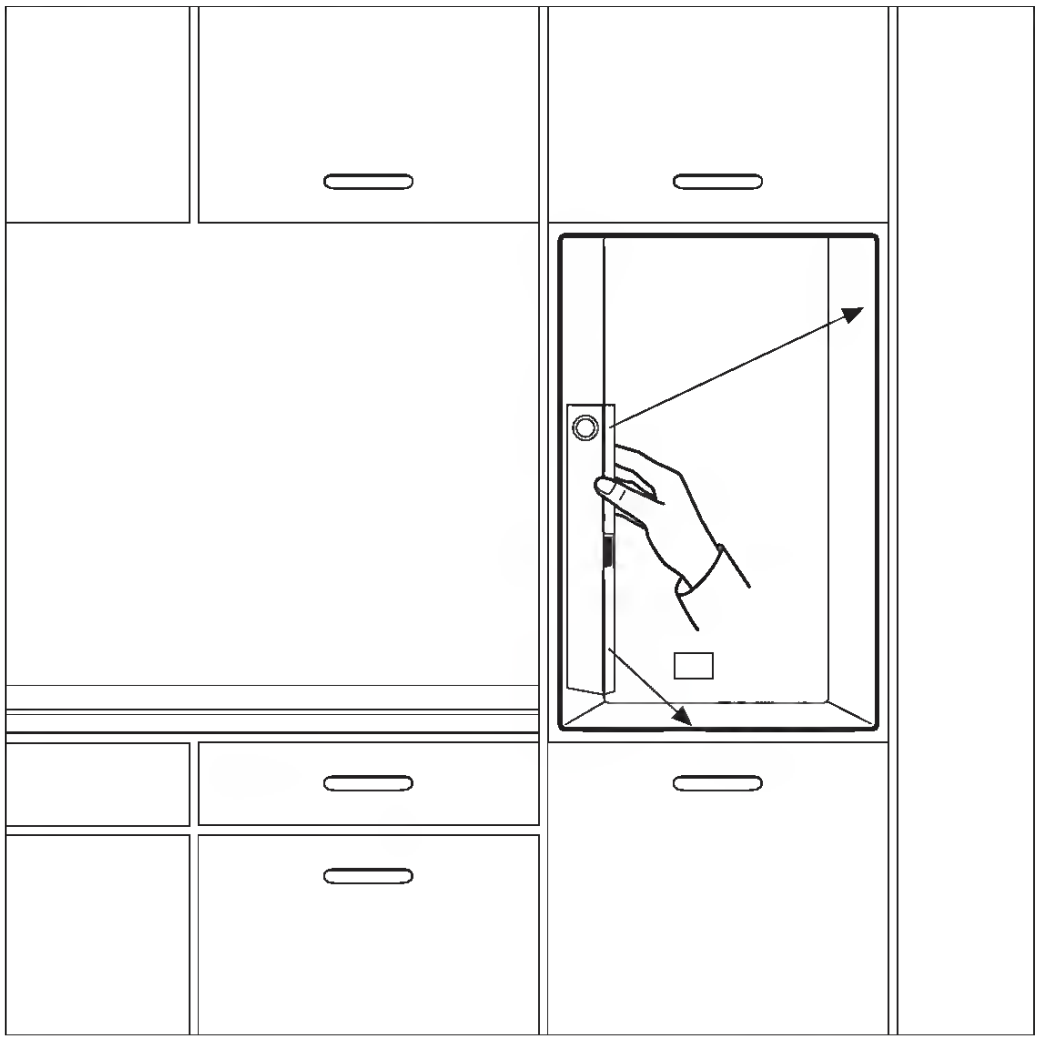

Downloaded from www.Manualslib.com manuals search engine

3 Enjoy the convenience of a well-organized desktop.

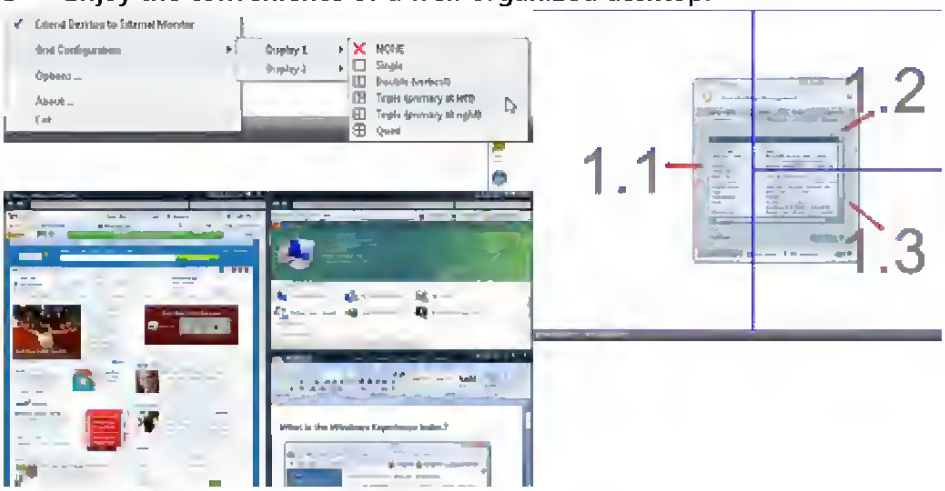

Note: Please ensure that the resolution setting of your second monitor is set to the manufacturer's recommended value.

Launch Manager

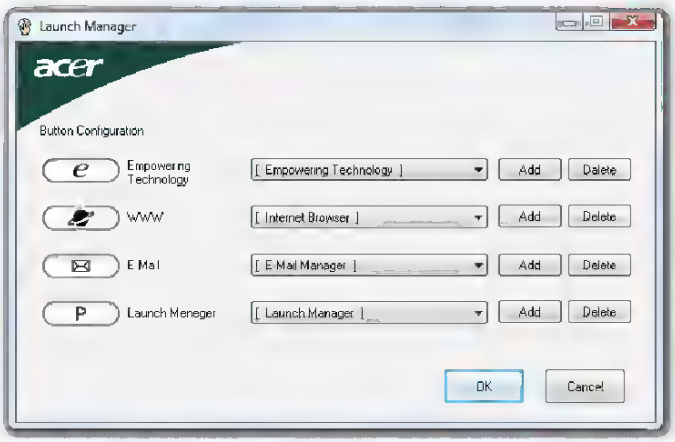

Launch Manager allows you to set the four easy-launch buttons located above the keyboard. **"Easy-launch buttons" on page 25** for the location of the easy-launch buttons.

You can access the Launch Manager by clicking on **Start**, **All Programs**, and then **Launch Manager** to start the application.

Norton Internet Security

Norton Internet Security is an anti-virus utility that can protect against viruses, keeping your data safe and secure.

Downloaded from www.Manualslib.com manuals search engine

Downloaded from www.Manualslib.com manuals search engine

10-2-7 Video I/O & SPDIF

B07 Video I/O & SPDIF

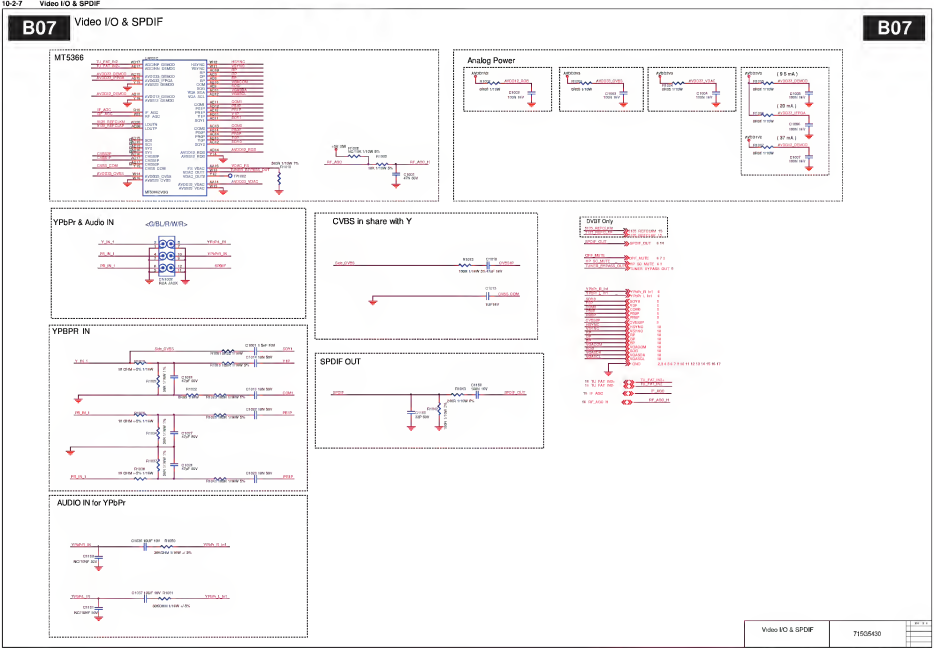

19270_510_120409.eps
120410

2012-Sep-28 back to div table

SCHEMATIC DIAGRAM

UNIT X66-1820-××

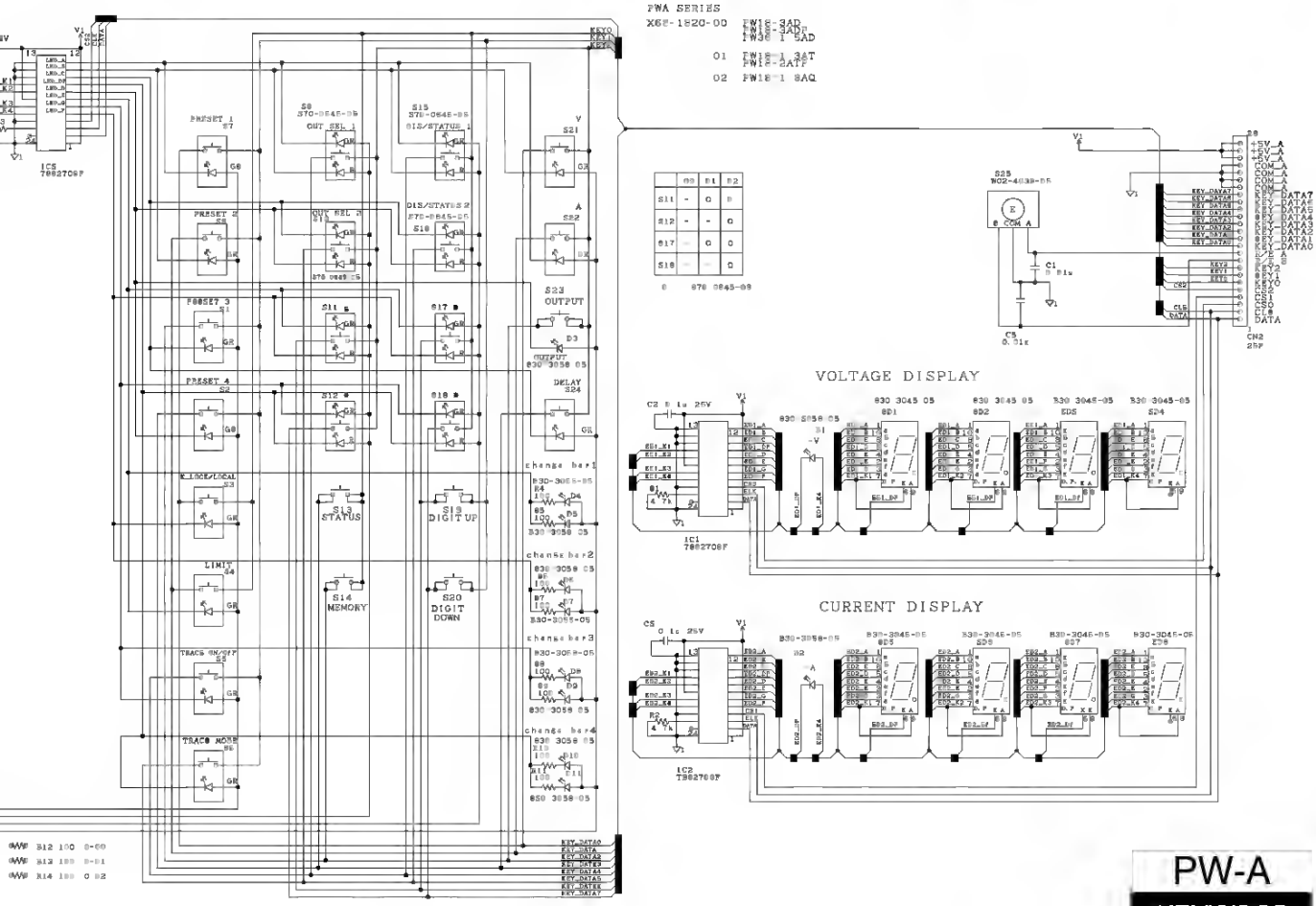

PW-A

KENWOOD

Downloaded from www.Manualslib.com manuals search engine

REPAIR METHOD TELETEXT DECODER

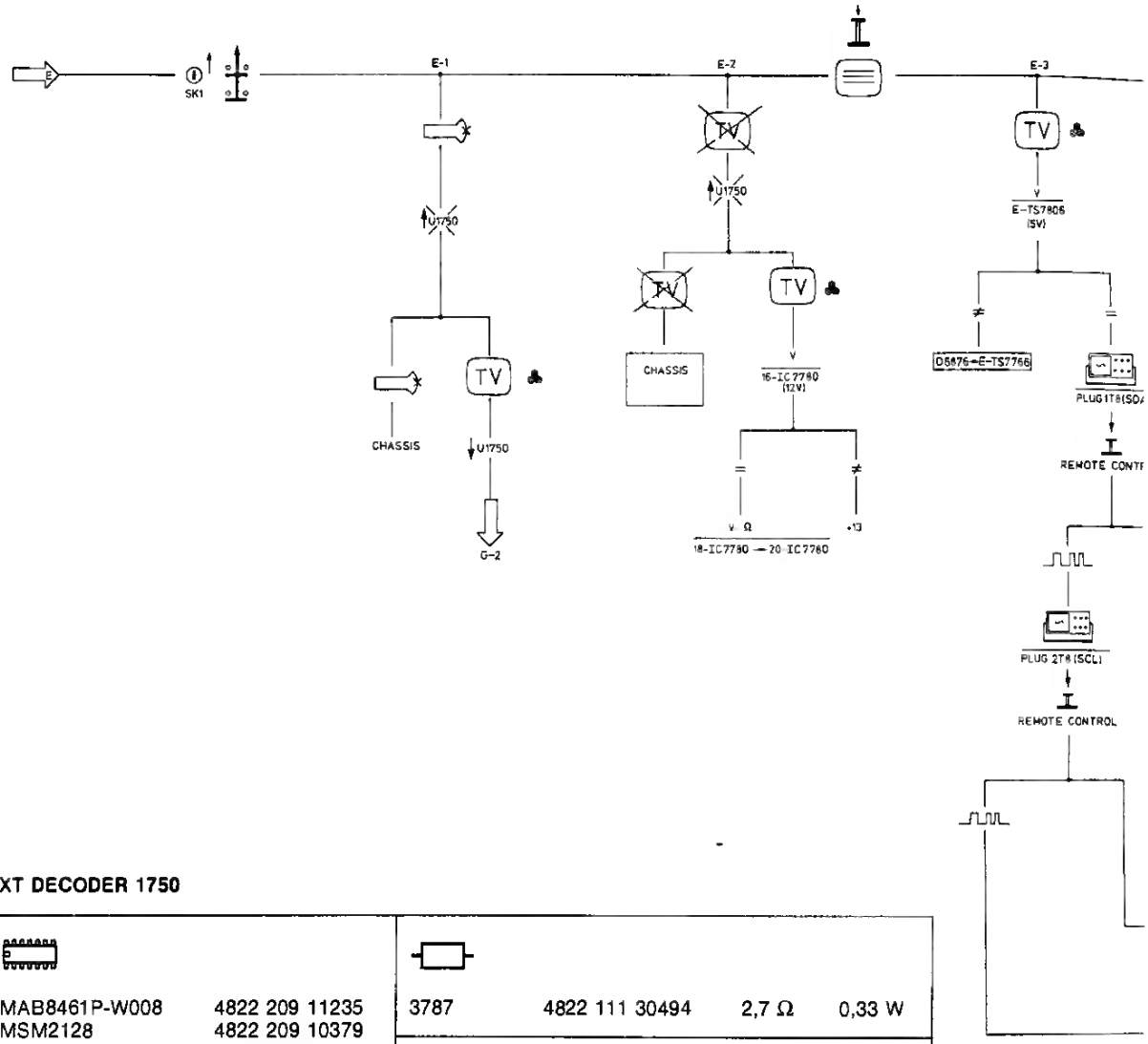

TXT DECODER 1750

MAB8461P-W008	4822 209 11235		
MSM2128	4822 209 10379		
SAA5230	4822 209 82786		
SAA5241A	4822 209 82819		
SAA5241B	4822 209 82785		
BC548	4822 130 40938		
BC548B	4822 130 40937		
BC558	4822 130 40941		
BC558B	4822 130 44197		
BD943	5322 130 44921		
PH2369	4822 130 41594		
BYD33G	4822 130 42489		
BZX55-B5V1	4822 130 33524		
BZX55-B8V2	4822 130 33526		
5750	4822 157 51462		
5766	4822 157 51157		
5795	4822 157 52392		
5800	4822 157 50965		
3787	4822 111 30494	2,7 Ω	0,33 W
2788	4822 125 50045	20 pF	trimm.
2789	4822 124 21936	2.2 µF	50 V
Various			
1752	4822 242 70932	Crystal 6 MHz	
1788	4822 242 70932	Crystal 6 MHz	
1800	4822 242 71417	Crystal 13,875 MHz	
T8	4822 265 40471	8p	
T9	4822 265 40469	6p	

Downloaded from www.Manualslib.com manuals search engine

Installing a Memory Module

The ProLiant ML330e/ML330 server supports PC133-MHz Registered ECC SDRAM DIMMs. Additional DIMMs (64-MB, 128-MB, 256-MB, or 512-MB) are available to upgrade the memory. The server has four DIMM sockets located on the system board.

It is not necessary to install DIMMs in pairs, and they can be installed into any available socket.

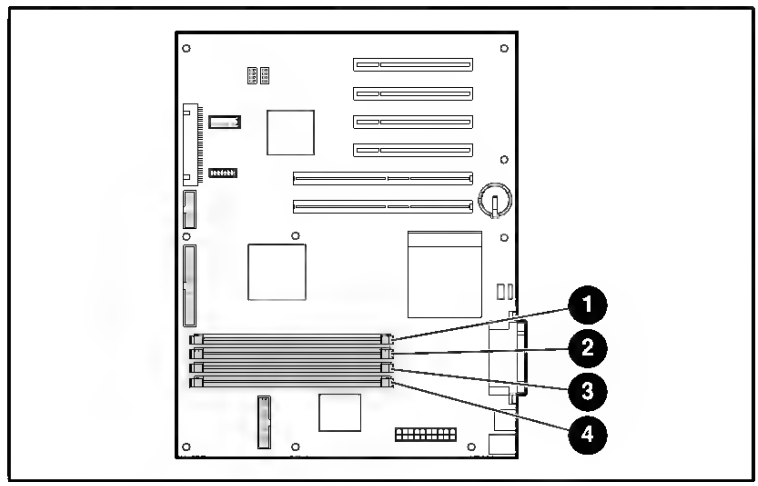

Figure 3-23. Locating DIMM sockets

Table 3-3
DIMM Sockets

Item	Component	Item	Component
❶	DIMM socket 1	❸	DIMM socket 3
❷	DIMM socket 2	❹	DIMM socket 4

Downloaded from www.Manualslib.com manuals search engine

Power-On Self-Test (POST) Error Messages

The Power-On Self-Test (POST) is a series of diagnostic tests that runs automatically on Compaq computers when the system is powered up. POST checks firmware and assemblies to ensure that the computer system is functioning properly.

If POST finds an error in the system, an error condition is indicated by an audible or visual message. If an error code displays on the screen during POST or after resetting the system, follow the instructions in the Table 3-2. The error messages and codes listed include all codes generated by Compaq products. Your system generates only the codes that are applicable to your configuration and options.

NOTE: Many of the actions listed require you to run Diagnostics or the server setup utility appropriate to your server. Steps for running these utilities are also provided in the *Compaq Servers Troubleshooting Guide*.

Accessing Non Hot-Plug Areas

To install options, upgrades, or replacements in these areas, you must first shut down the server power.

Accessing System Board Components

With the access panel and processor removed, you should be able to locate and identify the System Board components shown in Figure 4-2.

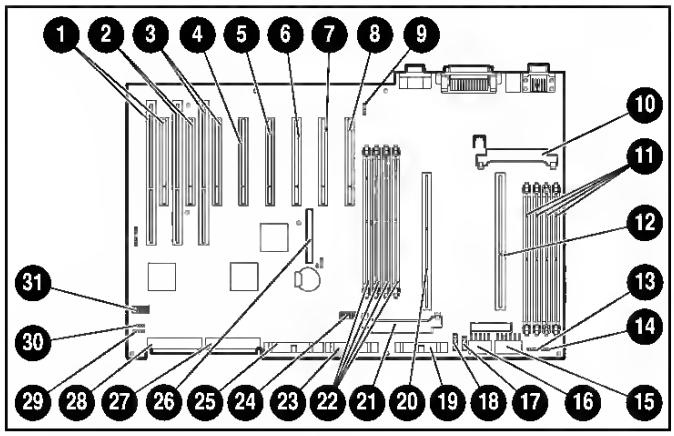

Figure 4-2. System board features

Table 4-1
System Board Features

Ref.	Component
1-3	Shared PCI/ISA slots
4-8	PCI slots
9	Auxiliary Fan
10	Secondary processor power module
11	Memory DIMM sockets 1-4

Continued

Writer: Cheri Stewart Project: Compaq ProLiant 3000 Servers Setup and Installation Guide Comments: 179776-002
File Name: E-CH04.DOC Last Saved On: 1/12/99 1:28 PM
COMPAQ CONFIDENTIAL - NEED TO KNOW REQUIRED

Downloaded from www.Manualslib.com manuals search engine

LECTURE DU CHANGEUR DE CD

Cet appareil permet de lire des CD en raccordant le changeur de CD AIWA en option. Vérifier que le chargeur contenant les CD est inséré dans le changeur de CD raccordé.
Consulter le manuel d'installation et de connexion pour l'installation du changeur de CD.

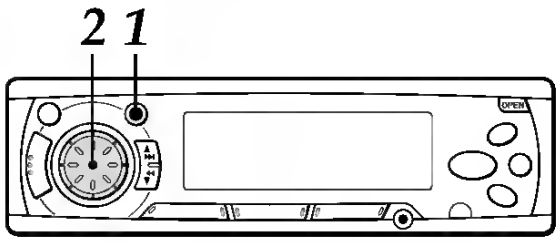

1 Presser plusieurs fois FUNCTION pour sélectionner le mode Lecture du changeur de CD et démarrer la lecture de CD.
Les numéros de CD et de piste s'afficheront.

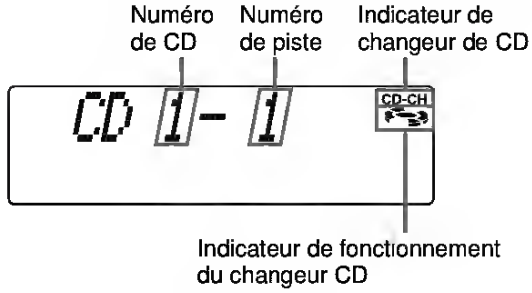

2 Ajuster le volume avec la bague Jog.

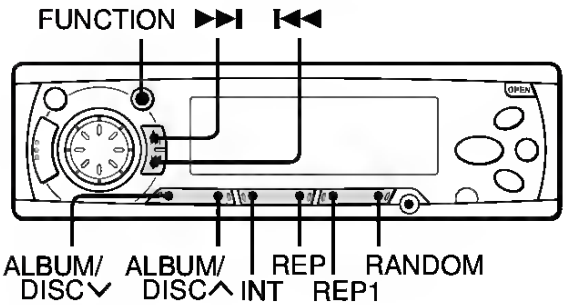

Pour changer de mode
Presser FUNCTION pour passer à un autre mode.

Pour sauter des pistes

Touches	Presser pour*	Presser et maintenir enfoncé pour
▶▶I	Sauter à la piste suivante	Avancer rapidement Relâcher pour reprendre la lecture
I◀◀	Sauter en arrière au début de la piste actuelle ou de la piste précédente.	Reculer rapidement Relâcher pour reprendre la lecture

* Presser moins de 0,5 seconde.

Pour lire un autre CD
Presser ALBUM/DISC ∨ pour démarrer la lecture du CD précédent dans le chargeur de disques.
Presser ALBUM/DISC ∧ pour démarrer la lecture du CD suivant dans le chargeur de disques.
Le numéro du CD apparaît.

Lecture d'intro
Presser INT (l'indication "SCAN" apparaît).
Les 10 premières secondes de chaque piste de tous les CD dans le chargeur de disques sont lues séquentiellement.
Presser à nouveau INT pour annuler la lecture d'intro.

Lecture répétée
Presser REP1 (l'indication "REPEAT 1" apparaît) pour répéter la piste actuelle.
Presser REP (l'indication "REPEAT" apparaît) pour répéter le CD actuel.
Presser à nouveau la même touche pour annuler le mode.

Lecture aléatoire (seulement avec le changeur de CD AIWA en option)
Presser RANDOM (l'indication "RANDOM" apparaît).
Toutes les pistes du CD actuel sont lues dans un ordre aléatoire.
Presser à nouveau RANDOM pour annuler la lecture aléatoire.

Downloaded from www.Manualslib.com manuals search engine

مقدمة

- نظرة عامة عن المنتج

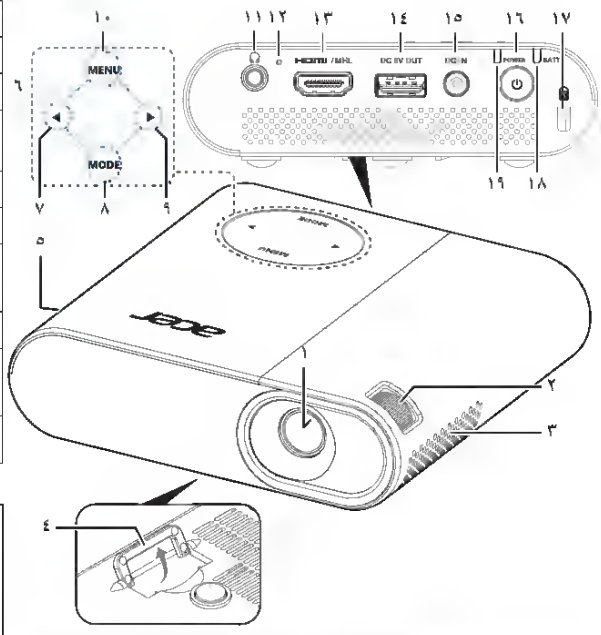

الرقم	الوصف	الرقم	الوصف
١	عدسة الإسقاط	١١	سماعة الرأس
٢	عجلة البؤرة	١٢	فتحة إعادة التعيين
٣	مدخل الهواء	١٣	موصل HDMI/MHL
٤	عجلات ضبط الميل / مقبض القلب	١٤	منفذ توصيل خرج تيار مباشر ٥ فولت
٥	مخرج الهواء	١٥	دخل التيار المباشر
٦	مفاتيح الاتجاه	١٦	زر الطاقة
٧	خفض مستوى الصوت	١٧	منفذ قفل Kensington™
٨	الوضع/التأكيد	١٨	مؤشر LED لحالة البطارية
٩	رفع الصوت	١٩	مؤشر LED حالة الشحن/ التشغيل
١٠	القائمة/خروج		

- التشغيل

تشغيل	ضغطة طويلة > ١ ث
إيقاف التشغيل	ضغطة قصيرة < ١ ث مرتين
تشغيل/إيقاف بنك الطاقة	ضغطة قصيرة < ١ ث في وضع البطارية

- حالة خرج الطاقة

	تشغيل		إيقاف التشغيل	
	مهايئ طاقة	بطارية التشغيل	مهايئ طاقة	بطارية التشغيل
خرج تيار مباشر ٥ فولت	٥فولط	٥فولط	٥فولط	٥فولط
MHL	٥فولط	٥فولط	X	X
HDMI	X	X	X	X

ملاحظة: عند توصيل MHL بجهاز العرض لن يعمل خرج تيار مباشر ٥ فولت.

- وقت نفاذ شحن البطارية في وضع العرض

	اقتصادي	قياسي	ساطع
HDMI رقم ١	O	O	O
عمر البطارية رقم ٢ (ساعة)	٤,٥	٣	٢

ملاحظة:
رقم ١ ١٠٨٠x١٩٢٠ عند ٦٠ هرتز
رقم ٢ إيقاف خرج ٥ فولت

- أوضاع التوافق

أ- حاسب شخصي HDMI	
الدقة	معدل التحديث (هرتز)
SVGA/XGA/WXGA/1080p	٦٠
ب- فيديو HDMI (MHL)	
الدقة	معدل التحديث (هرتز)
*480i/480p/720p/1080i/1080p	٦٠
*576i/576p/720p/1080i/1080p	٥٠
1080p	٢٤

ملاحظة: * MHL غير مدعوم.

- مؤشر LED / الرسالة

حالة البطارية	الشحن	تم الإكمال
مؤشر LED لحالة التشغيل	أحمر	أزرق
مستوى البطارية	BATT_LED	الرسالة
٧٠٪~١٠٠٪	أخضر	سيتم إيقاف تشغيل جهاز العرض تلقائياً: (توان)
٤٠٪~٧٠٪	برتقالي	
٥٪~٤٠٪	أحمر	
< ٥٪ رقم ١	أحمر (وميض) (٠,٥ ثانية تشغيل، و٠,٥ ثانية إيقاف)	١٠ ثانية
تعطل المروحة رقم ٢	أحمر (وميض) (٠,٥ ثانية للتشغيل/١ ثانية للإيقاف)	٣٠ ثانية
زيادة سخونة جهاز العرض رقم ٢	أحمر (وميض) (٠,٥ ثانية للتشغيل/١ ثانية للإيقاف)	٣٠ ثانية
زيادة سخونة البطارية	برتقالي (وميض)	--

ملاحظة:
رقم ١ سيتم إيقاف تشغيل جهاز العرض تلقائياً بعد الحدث.
رقم ٢ سيتم إيقاف تشغيل جهاز العرض تلقائياً قبل الحدث.

المذكرة والصيانة

١- لا يمكن تثبيت هذا المنتج إلا على جهاز سطح مكتب فقط، وإلا سيقل عمر المصباح بشكل كبير.
٢- حافظ دائما على إبقاء الشحن أعلى من ٣٠٪ للحصول على أداء أفضل لخلايا البطارية.
٣- أعد شحن مخزون الطاقة بالكامل كل ٣ أشهر على الأقل.
٤- احرص على إبعاد الجهاز عن مصادر الرطوبة والمواد المسببة للتآكل.
٥- يتم إيقاف تشغيل جهاز العرض تلقائيًا في حال عدم وجود إشارة دخل بعد ١٥ دقيقة.
٦- يدخل جهاز العرض في وضع الاقتصادي تلقائيا للحفاظ على الطاقة في حال عدم وجود إشارة دخل بعد ٥ دقائق.
٧- مع تقنية الشحن السريع يزيد مستوى شحن البطارية من ٥٪ إلى ٨٠٪ خلال حوالي ٣ ساعات و ٣٠ دقيقة، وإلى ١٠٠٪ خلال ٤ ساعات و ٤٥ دقيقة.
٨- تنخفض سعة البطارية مع طول وقت الاستخدام وزيادة أوقات إعادة الاستخدام.

Downloaded from www.Manualslib.com manuals search engine

Software

Downloaded from www.Manualslib.com manuals search engine

English

Downloaded from www.Manualslib.com manuals search engine

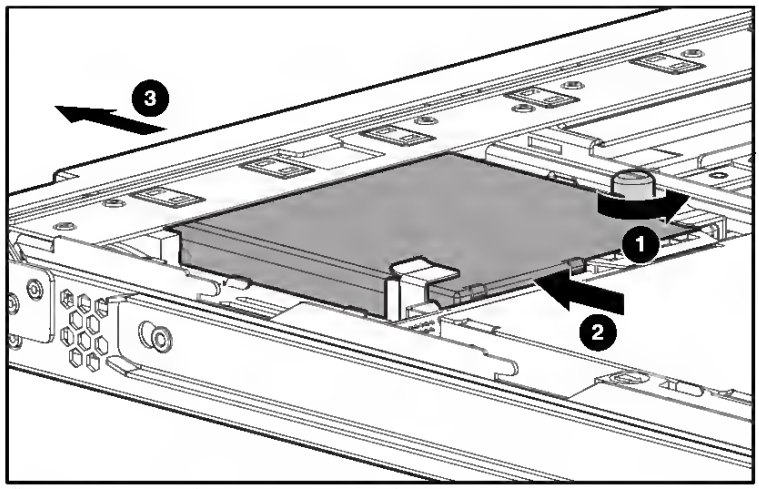

Figure 3-30. Removing the floppy disk drive

5. Push the floppy drive from the rear to release it from the backplane connector ❷ and pull the drive forward out of the chassis ❸.

CAUTION: Do not operate the server without a floppy disk drive installed. Improper cooling may damage the system.

6. Replace the floppy disk drive, see "Installing the Floppy Disk Drive" following this section.

Downloaded from www.Manualslib.com manuals search engine

B.20 Front Panel Connector (CN22)

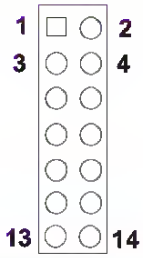

Table B.20: Front panel Connector (CN22)			
Pin	**Signal**	**Pin**	**Signal**
1	HDD LED+	2	HDD LED-
3	Power LED+	4	GND
5	Suspend LED	6	GND
7	LAN ACT+	8	LAN ACT-
9	LAN Link+	10	LAN Link-
11	VCC_DUAL	12	ATX Power Button
13	GND	14	Reset

B.21 SATA Connector 1 (CN23)

Table B.21: SATA Connector 1 (CN23)	
Pin	**Signal**
1	GND
2	TX0
3	TX0#
4	GND
5	RX0#
6	RX0
7	GND

Downloaded from www.Manualslib.com manuals search engine

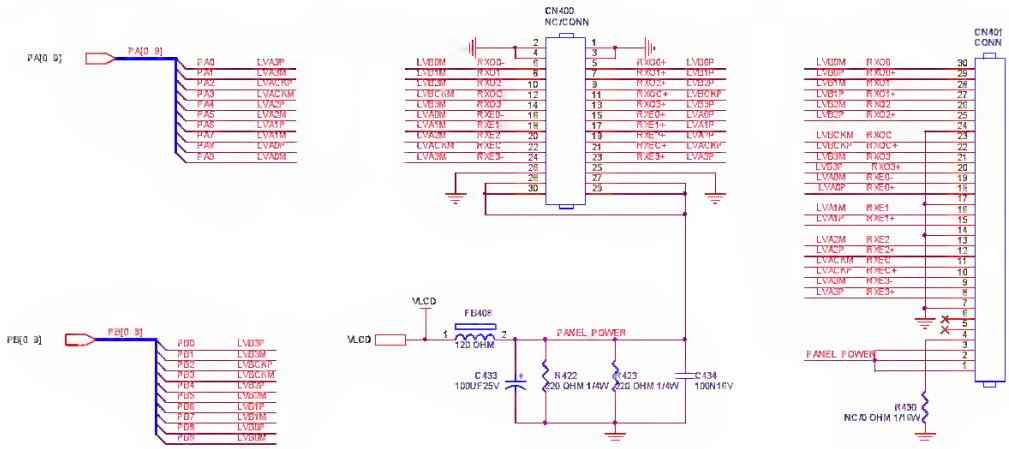

PANEL: CMO--M216H1-L01

TPV (Top Victory Electronics Co Ltd.)		OEM MODEL		Size	A4
结构尺寸图		TPV MODEL		Rev	1
Key Component	05 PANEL INTERFACE	PCB NAME	715G3381-1	标签	<标签>
Date	Tuesday August 30 2011	Sheet	7 of 10		

ENGINE OIL CHANGE

Warm up the engine.

Stop the engine and remove the oil filler cap/dipstick.

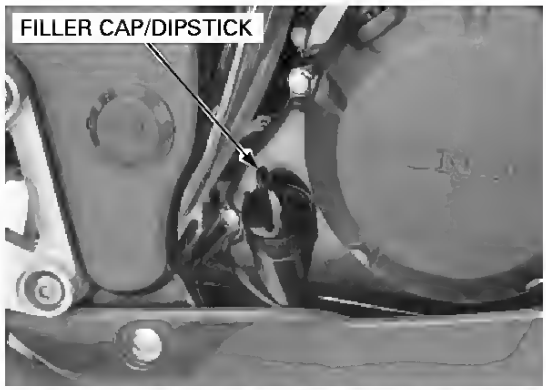

Place an oil pan under the engine to catch the engine oil, then remove the drain bolt/sealing washer.

Drain the engine oil completely.

Install a new sealing washer onto the drain bolt.

Apply engine oil to the drain bolt threads and seating surface.

Install and tighten the drain bolt/sealing washer to the specified torque.

TORQUE: 25 N·m (2.5 kgf·m, 18 lbf·ft)

Fill the engine with the recommended engine oil (page 3-13).

ENGINE OIL CAPACITY:
1.0 liter (1.1 US qt, 0.9 Imp qt) at draining
1.3 liters (1.4 US qt, 1.1 Imp qt) at disassembly

Install the oil filler cap/dipstick.

Check the oil level (page 3-13).

Make sure there are no oil leaks.

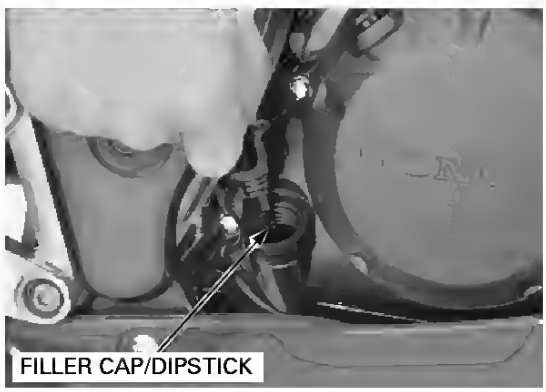

ENGINE OIL STRAINER SCREEN

REMOVAL/INSTALLATION

Remove the right crankcase cover (page 10-5).

Be careful not to damage the oil strainer screen

Pull the oil strainer screen out of the crankcase.

Wash the oil strainer screen thoroughly in nonflammable or high flash point solvent until all accumulated dirt has been removed.

Blow dry it with compressed air to clean completely. Before installing the strainer, it should be examined closely for damage, and make sure the sealing rubber is good condition.

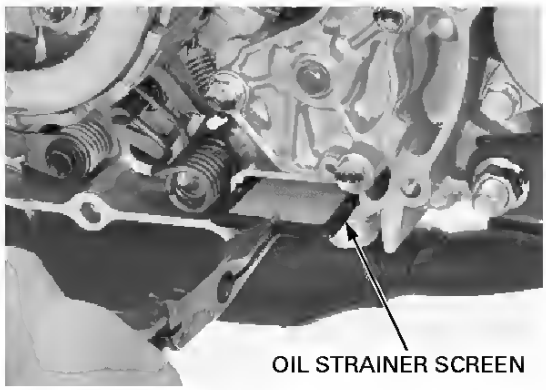

To ensure proper operation of your FOCUS® 200 PLUS security system, it is recommended that you periodically test all devices within your system. You can print, display, or audibly annunciate all system tests. Before testing protection groups and/or points, turn off the group(s) containing the points to be tested.

Burglary Protection Points (Audible)

1. Using the operating panel's numeric keypad, enter a valid ID code to display Action Menu 1.
2. Bypass all protection points to be tested.
3. Press **More** to display Action Menu 2.
4. Press **Test** to display Test Menu 1.
5. Press **More** to display Test Menu 2.
6. Press **Burg pts. audibly** to audibly annunciate the test from the operating panel and begin the system test. The display will indicate "Test in Progress."
7. Walk through the test areas and activate each protection point to be tested. You will hear a beep when all points are secure (normal) and a steady tone when a point is activated.
8. When the test is complete, return to the operating panel and re-enter your ID code to display Action Menu 1.
9. Press **Reset** to display the reset options.
10. Press **Tests** to exit the test mode and to return the system to normal operation.
11. Press **Continue** to display Action Menu 1.
12. Unbypass those points that were bypassed for test purposes.

Downloaded from www.Manualslib.com manuals search engine

Table 3-2
POST Error Messages *continued*

Error Code	Audible Beeps L=Long S=Short	Probable Source of Problem	Recommended Action
1764-Slot x Drive Array - Capacity Expansion Process is temporarily disabled (followed by one of the following): ■ Expansion will resume when Array Accelerator has been reattached. ■ Expansion will resume when Array Accelerator has been replaced. ■ Expansion will resume when Array Accelerator RAM allocation is successful. ■ Expansion will resume when Array Accelerator battery reaches full charge. ■ Expansion will resume when automatic data recovery has been completed			Reattach or replace Array Accelerator, wait until the Array Accelerator batteries have charged, or for Automatic Data Recovery to complete, as indicated.
1765-Slot x Drive Array Dption RDM Appears to Conflict With an ISA Card ISA cards with 16-bit memory cannot be configured in memory range C0000 to DFFFF along with the SMART-2/E 8-bit Dption RDM due to EISA bus limitations Please remove or reconfigure your ISA card.			Remove or reconfigure conflicting ISA cards. Disable "shared memory" on any ISA network cards that may be installed.
1766-Slot x Drive Array requires System RDM Upgrade Run Systems RDMPaq Utility.			Run the latest Systems RDMPaq Utility to upgrade your System RDMs.
1767-Slot x Drive Array Dption RDM is Not Programmed Correctly or may Conflict with the Memory Address Range of an ISA Card. Check the Memory Address Configuration of installed ISA Card(s) or run Dptions RDMPaq Utility to attempt SMART-2/E Dption RDM Reprogramming.			Remove or reconfigure conflicting ISA cards, especially any cards that are not recognized by the System Configuration Utility. Try reprogramming the RDM on the SMART-2/E Controller using the latest Dptions RDMPaq (version 2.29 or higher).
1768-Slot x Drive Array -Resuming logical drive expansion process.	None	SMART-2 Controller error.	No action required. Appears whenever a controller reset or power cycle occurs while array expansion is in progress
1769-Slot x Drive Array - Drive(s) disabled due to failure during expand. Select **F1** to continue with logical drives disabled. Select **F2** to accept data loss and to re-enable logical drives.	None	SMART-2 Controller error.	Data has been lost while expanding the array, therefore the drives have been temporarily disabled. Press **F2** to accept the data loss and re-enable the logical drives. Restore data from backup.
1771-Primary Disk Port Address Assignment Conflict	None	Internal and external hard drive controllers are both assigned to the primary address.	Run the System Configuration Utility and correct.
1772-Secondary Disk Port Address Assignment Conflict	None	Address Assignment Conflict. Internal and external hard drive controllers are both assigned to the secondary address.	Run the System Configuration Utility and correct.

continued

Downloaded from www.Manualslib.com manuals search engine

Firmware Warning Messages	Description/Action Required
WARNING: FAN FAILURE HAS BEEN DETECTED. THE SYSTEM WILL BE POWERING DOWN. PLEASE CALL YOUR SERVICE REPRESENTATIVE	A chassis fan failure requires replacing the EBU.
ERROR: A3342A AP Card must be in bottom slot only.	Move the AP A3342A card to the bottom slot.
ERROR: HSC card in wrong slot. Move to bottom slot.	A mix of HSC and PCI cards has been detected. The HSC card must be installed in the bottom slot.

Chassis Code Summary

Operating Status (OSTAT) and chassis codes are generated by A-Class server firmware. OSTAT and chassis codes can be read from stored locations or viewed 'real time' via the HSC Remote Management card.

Chassis codes displayed during selftest only appear at the console. They will appear on either the ASCII console or the Web console. Below is an example of how chassis codes appear in response to a 'control b' key sequence:

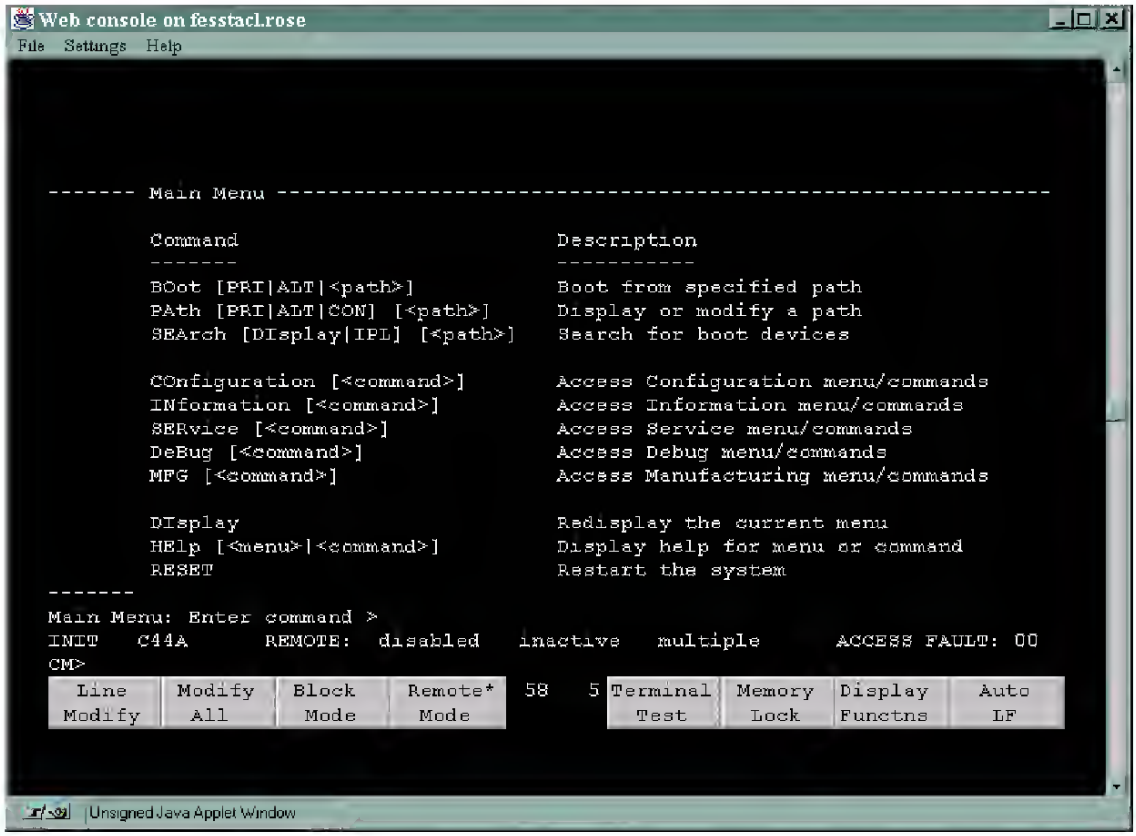

Downloaded from www.Manualslib.com manuals search engine

What to do if ...

Fault	Possible cause	Remedy
The oven will not heat.	The oven has not been switched on.	Switch the oven on.
	The correct time has not been set.	Set the correct time.
	The required settings have not been made.	Check the settings.
	The oven's safety fuse has been tripped.	Check the safety fuse.
	The fuse in the domestic wiring system (fuse box) has been tripped.	Check the fuse. If the fuses are tripped repeatedly, please call a qualified electrician.
"F 9" appears on the display.	-	Press the mains button.
The oven is not heating up, and the function display is operating. A small arrow will light up.		Set the oven function to ZERO. Do not switch off the oven. Press and hold down the three centre buttons simultaneously until a signal can be heard.
The oven light will not come on.	The bulb has blown.	Replace the bulb (see Care and Cleaning).

If you are unable to remedy the fault with the above assistance, please contact your specialist dealer or local Service Force Centre.

Caution: Repairs to the appliance should only be carried out by approved service engineers. Repairs carried out by inexperienced persons may cause serious injury to the user.
If the appliance has been used incorrectly, the customer service engineer's visit or that of the specialist dealer will not bee free of charge, even during the warranty period.

Advice on cookers with metal fronts:
Because of the cold surface at the front of the cooker, opening the oven door during (or just after) baking or roasting may cause the glass to steam up.

Downloaded from www.Manualslib.com manuals search engine

address if you have changed it). You will see the following prompt:

```
 Manager Console Version: <revision number, build date and time>
Please enter your password:
```

Enter the current password (which is the same as the browser password) and the command prompt displays.

```
Command>
```

Connecting to the CLI Through the Console Port

Another way to invoke the command line interface is to use the console port on the AcerRouter 700 to connect to a PC running the terminal software. In the box, you'll find a null modem cable that you can use to connect your PC (usually the COM2 port) to the AcerRouter 700 console port.

Connect to the CLI with a terminal program such as Hypercritical or Proclaim. Set your COM port parameters to 19200, N, 8, 1, with hardware flow control disabled. If your program does not allow you to set flow control options, set it in the Device Manager area of the Windows System settings (accessible from the Control Panel). Note that after configuring these settings, some programs require that you close the application and re-open it.

Enter a carriage return to start your session, and you'll see the following prompt:

```
 Manager Console Version: <revision number, build date and time>
Please enter your password:
```

Enter the current password (which is the same as the browser password) and the command prompt displays.

```
Command>
```

For more information about the CLI, see the CLI User's Guide located on your Acer Netxus CD-ROM.

4. Install tape drive into media bay.

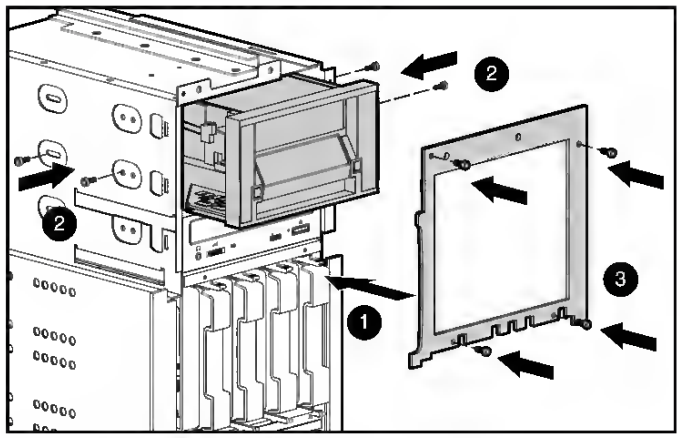

Figure 4-16 Installing tape drive

5. Install face plate.

6. Connect SCSI cable, located in the server, from the tape drive to the internal SCSI Port 1 or 2 or SCSI controller board in a PCI slot, if one is installed.

   NOTE: There are no special considerations as to which SCSI controller the tape drive is connected.

7. Install drive cage. See section "Installing Drive Cage."

Writer: Cheri Stewart Project: Compaq ProLiant 3000 Servers Setup and Installation Guide Comments: 179776-002
File Name: E-CH04.DOC Last Saved On: 1/12/99 1:28 PM
COMPAQ CONFIDENTIAL - NEED TO KNOW REQUIRED

Downloaded from www.Manualslib.com manuals search engine

Removing the Top Access Panel

To remove the top access panel:

1. If the server is on, place the server in Standby mode and disconnect the power cords. See "Powering Down the Server" earlier in the chapter.
2. Loosen the top two thumbscrews and slotted Torx (middle) screw.
3. Using the top access handle, slide the top access panel toward the rear of the unit about 1.0 inch (2.5 cm).

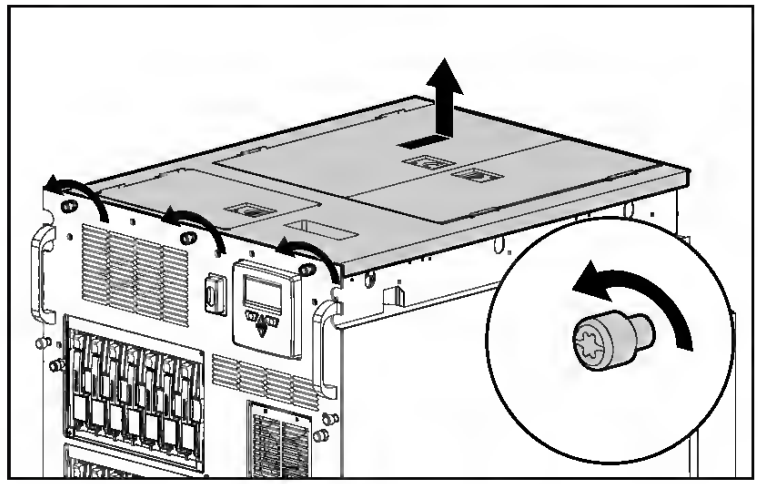

Figure 3-8. Removing the top access panel

4. To locate the I/O board, the PCI Hot Plug expansion slots, and I/O Fans 1 and 2, lift and remove the panel.

WARNING: To reduce the risk of personal injury from hot surfaces, allow the internal system components to cool before touching them.

CAUTION: Never operate the server with an access panel removed or partially installed. Doing so will cause thermal damage to the system and could void your warranty.

5. Turn the top access panel over to locate the access panel labels.

NOTE: These top access panel labels provide instructions for installing expansion boards and hot-plug fans, as well as information on PCI Hot Plug.

6. To reassemble the server, reverse steps 1 through 4.

Downloaded from www.Manualslib.com manuals search engine

3 Follow the instructions on screen to complete the process.

Burn backup disc

Using the **Burn Disc** page of Acer eRecovery Management, you can burn the factory default image, a user backup image, the current system configuration, or an application backup image to CD or DVD.

1 Press **<Alt> + <F10>** or select Acer eRecovery Management from the Empowering Technology toolbar to start Acer eRecovery Management.

2 Switch to the Burn Disc page by selecting the **Burn Disc** button.

3 Select the type of backup (factory default, user, current system, application) you would like to burn to disc. Choosing to burn a user backup will burn your most recently created backup image to disc.

4 Follow the instructions on screen to complete the process.

Note: Create a factory default image when you want to burn a bootable disc that contains your computer's entire operating system as it was delivered to you from the factory. If you wish to have a disc that will allow you to browse the contents and install selected drivers and applications, create an application backup image instead — this disc will not be bootable.

Restore and recovery

The restore and recovery features allow you to restore or recover the system from a factory default image, from a user created image, or from previously created CD and DVD backups. You can also reinstall applications and drivers for your Acer system.

1 Press **<Alt> + <F10>** or select Acer eRecovery Management from the Empowering Technology toolbar to start Acer eRecovery Management.

2 Switch to the restore and recovery page by selecting the **Restore** button.

3 Select the backup point you would like to restore from. You can also choose to recover the system from a factory default image, recover from a previously created CD/DVD or reinstall applications and drivers.

4 Follow the instructions on screen to complete the process.

Downloaded from www.Manualslib.com manuals search engine

POST Error Messages *Continued*

Error Code	Audible Beeps L=Long S=Short	Probable Source of Problem	Action
1793-Drive Array - Array Accelerator Battery Depleted - Data Lost (Error message 1794 also displays.)	None	This indicates that while the system was in use, power was interrupted while data was in the Array Accelerator memory. Array Accelerator batteries failed. Data in Array Accelerator has been lost.	Power was not restored within eight to ten days. Perform orderly system shutdowns to avoid data remaining in the Array Accelerator.
1794-Drive Array - Array Accelerator Battery Charge Low. Array Accelerator is temporarily disabled. Array Accelerator will be re-enabled when battery reaches full charge.	None	This is a warning that the battery charge is below 75%. Posted writes are disabled.	Replace the Array Accelerator board if batteries do not recharge within 36 power-on hours.
1795-Drive Array - Array Accelerator Configuration Error. Data does not correspond to this drive array. Array Accelerator is temporarily disabled.	None	This indicates that while the system was in use, power was interrupted while data was in the Array Accelerator memory. The data stored in the Array Accelerator does not correspond to this drive array.	Match the Array Accelerator to the correct drive array, or run the System Configuration Utility to clear the data in the Array Accelerator.

Downloaded from www.Manualslib.com manuals search engine

Parts

Aspire E571

PARTNAME	DESCRIPTION	ACER PART NO.
BOARD		
DAUGHTER BOARD USB/AUDIO	USB BOARD	55.S46VF.001
USB BOARD H401YAOYA	USB BOARD H401YAOYA	TBD
POWER SWITCH/LED DB	POWER SWITCH/LED DB	55.S32VF.002
CARD READER		
"KYE CARD READER+1394+IR, CR503U2, W/I HOUSING, W/I 1394 CABLE+USB CABLE"	CR503U2-5111	PZ.CR50J.003
"KYE CARD READER 3.5"" (BLACK) 9-IN-1 CARD READER"	ID03	PZ.00908.001
"3.5"" USB1.1 9-in-1 card reader, with USB cable , with improved USB connector"	CR126	PZ.CR90K.002
CABLE		
"POWER/LED CABLE ASSY,ROHS"	"POWER SWITCH/LED CABLE,ROHS"	50.S57VF.001
POWER SWITCH/ HDD /LAN LED CABLE	POWER SWITCH/ HDD /LAN LED CABLE	50.S55VF.001
IDE CD-ROM CABLE ATA66 40PIN	"CDROM DATA CABLE, ROHS"	50.S46VF.008
HDD CABLE SATA_1	"SATA-HDD DATA CABLE, ROHS"	50.S46VF.001
USB CABLE	"USB CABLE, ROHS"	50.S46VF.003
AUDIO CABLE	"AUDIO CABLE (560MM), ROHS"	50.S46VF.004
IDE FDD CABLE 34PIN	"FDD DATA CABLE, ROHS"	50.S46VF.007
CABLE W/I SPDIF CARD 280mm R	CABLE W/I SPDIF CARD 280mm R	55.S46VF.003
LED CABLE FOR THE LOGO	LED CABLE FOR THE LOGO	50.S46VF.005
IR CABLE	IR CABLE	50.S46VF.006
USB CABLE	USB CABLE °]460MM)	50.S46VF.002
CASE/ COVER/ BRACKET ASSEMBLY		
LOGO ACER 55.12*13.40*0.8	LOGO ACER 55.12*13.40*0.8	TBD
A451-BEZEL ASSY 4USB PORTS	A451-BEZEL	60.S610F.001
POWER BUTTON	POWER BUTTON	42.S46VF.001
ODD COVER 1 W/ HOLDER	A451 ODD-UPPER DOOR W/ HOLDER	42.S46VF.002
ODD COVER 2 W/ HOLDER	A451 ODD-LOWER DOOR W/ HOLDER	42.S46VF.003
TOP COVER ASSY	TOP COVER ASSY	60.S46VF.002
FRONT COVER WITH ACER LOGO	FRONT COVER WITH ACER LOGO	60.S46VF.003
"FILLER COVER FOR 3 1/2"" DEVICE"	"3.5"" FILLER PANEL"	42.S46VF.009
CHASSIS W/O SIDE DOOR W/O I/O SHIELD H401	H401 CHASSIS W/O SIDE DOOR W/ O I/O SHIELD	60.S46VF.004
SIDE DOOR-LEFT	LEFT-BKT-DOOR (PAINTING)	60.S46VF.005

Downloaded from www.Manualslib.com manuals search engine

Table 4-1
Gaining Access to Internal Components *continued*

Component	Access
Front of media drive bays	Open the front bezel*
Internal SCSI cables	Open the front bezel* and remove both the large and small access panel
Internal SCSI connectors (ports 1 & 2)	Open the front bezel* and remove the small access panel
Memory	Open the front bezel* and remove the large access panel
Second processor (CPU)	Open the front bezel* and remove the large access panel
Switches for processor components	Open the front bezel* and remove the large access panel

NOTE: *Procedural step not required for the rack model.

WARNING: To reduce the risk of personal injury from hot surfaces, allow the internal system components to cool before touching any surfaces.

WARNING: To reduce the risk of injury or damage to the equipment when installing options, ensure that the power to the server is turned off and that the AC power cord is disconnected.

CAUTION: Electrostatic discharge can damage electronic components. Be sure you are properly grounded before beginning any installation procedure. Refer to Appendix B, "Electrostatic Discharge," for more information.

IMPORTANT: The system power in the server does not completely shut off from the front panel Power On/Standby switch. Moving the switch from On to Standby leaves some portions of the power supply and some internal circuitry active. To remove all power from the system, you must disconnect all power cords from the server.

Downloaded from www.Manualslib.com manuals search engine

Table 3–5 Pin List Sorted by PGA Location (Continued)

PGA Location	Signal Name	PGA Location	Signal Name	PGA Location	Signal Name
BC25	SysAddIn_L_9	BC29	SysAddIn_L_1	BC3	BcData_H_91
BC31	SysAddOut_L_12	BC35	SysAddOut_L_3	BC37	BcCheck_H_7
BC41	BcData_H_125	BC43	BcData_H_60	BC5	BcDataInClk_H_3
BC9	BcData_H_94	BD10	BcCheck_H_11	BD12	PllBypass_H
BD16	Reset_L	BD18	Tms_H	BD2	NoConnect
BD22	SysDataInValid_L	BD24	SysAddIn_L_12	BD28	SysAddIn_L_6
BD30	SysAddIn_L_0	BD34	SysAddOutClk_L	BD36	SysAddOut_L_2
BD4	Spare	BD40	BcData_H_127	BD42	BcData_H_61
BD6	BcData_H_92	BE11	ClkFwdRst_H	BE13	IRQ_H_1
BE17	SromOE_L	BE19	Tck_H	BE23	SysAddIn_L_13
BE27	SysAddIn_L_7	BE29	SysAddIn_L_3	BE33	SysAddOut_L_10
BE35	SysAddOut_L_6	BE39	SysAddOut_L_1	BE41	BcData_H_63
BE5	BcData_H_29	BE7	BcData_H_31	BE9	Spare
C11	BcData_H_64	C15	BcTag_H_28	C17	BcTag_H_32
C21	BcTag_H_40	C23	BcTagDirty_H	C25	BcTagOutClk_H
C29	BcAdd_H_8	C3	BcData_H_4	C31	BcAdd_H_12
C35	BcAdd_H_22	C37	BcData_H_33	C41	BcData_H_35
C43	BcData_H_36	C5	BcData_H_3	C9	BcData_H_66
D10	BcData_H_1	D14	BcTag_H_24	D16	BcTag_H_30
D2	BcData_H_71	D20	BcTag_H_38	D22	BcTag_H_41
D24	BcTagOutClk_L	D26	BcDataWr_L	D30	BcAdd_H_11
D32	BcAdd_H_17	D36	BcData_H_97	D4	BcData_H_69
D42	BcData_H_100	D44	BcData_H_101	D8	SysDataInClk_H_0
E1	BcData_H_7	E13	BcTag_H_20	E15	BcTag_H_25
E19	BcTag_H_34	E21	BcTag_H_39	E25	BcTagWr_L
E27	BcAdd_H_5	E3	BcData_H_5	E31	BcAdd_H_16
E33	BcAdd_H_23	E37	SysDataInClk_H_4	E39	Spare
E43	BcData_H_37	E45	BcCheck_H_12	E7	BcDataInClk_H_0
F12	SysData_L_2	F14	SysData_L_0	F18	BcVref
F2	BcCheck_H_0	F20	BcTag_H_37	F26	BcLoad_L
F28	BcAdd_H_9	F32	SysData_L_32	F34	SysData_L_33
F38	BcDataInClk_H_4	F40	SysData_L_36	F44	BcData_H_39
F6	SysData_L_6	F8	Spare	G1	BcData_H_73
G11	SysDataOutClk_L_0	G13	SysData_L_1	G17	BcTag_H_27
G19	BcTagInClk_H	G23	BcTagShared_H	G27	BcAdd_H_7
G29	BcAdd_H_14	G33	BcData_H_32	G35	SysData_L_35

Downloaded from www.Manualslib.com manuals search engine

SpeedDial extension.

Connection Log Messages

These messages inform you of the time and date associated with an ISDN connect or disconnect event.

mm-dd-yy hh:mm:ss n Connected/Disconnected

Embedded HTTP Server Messages

These are messages which the HTTP Browser will generate should problems occur during configuration. Their appearance may differ from browser to browser.

HTTP/1.0 404 File Not Found

The server has not found anything matching the Request-URI. No indication is given of whether the condition is temporary or permanent.

HTTP/1.0 500 Internal Server Error

The server encountered an unexpected condition which prevented it from fulfilling the request.

Table 5-1
Event Messages

Event Type	Event Message
Machine Environment	
Fan Failure	System Fan Failure (Fan X, Location)
Fan Inserted	System Fan Inserted (Fan X, Location)
Fan Removed	System Fan Removed (Fan X, Location)
Fans Not Redundant	System Fans Not Redundant
Overheat Condition	System Overheating (Zone X, Location)
Main Memory	
Correctable Error threshold exceeded	Corrected Memory Error threshold passed (Slot X, Memory Module X)
	Corrected Memory Error threshold passed (System Memory)
	Corrected Memory Error threshold passed (Memory Module unknown)
Uncorrectable Error	Uncorrectable Memory Error (Slot X, Memory Module X)
	Uncorrectable Memory Error (System Memory)
	Uncorrectable Memory Error (Module unknown)
Processor	
Correctable Error Threshold exceeded	Processor Correctable Error Threshold passed (Slot X, Socket X)
Uncorrectable Error	
Host Bus Error	Processor Uncorrectable internal error (Slot X, Socket X)
	Unrecoverable Host Bus Data Parity Error
	Unrecoverable Host Bus Address Parity Error
PCI Bus Error	PCI Bus Error (Slot X, Bus X, Device X, Function X)

continued

Writer: Rick Chew Project: Compaq ProLiant 800 Servers Supporting Pentium II Processors and 100-MHz System Bus Setup and Installation Guide Comments: 179489-001
File Name: f-ch05.doc Last Saved On: 3/31/98 10:44 AM

Downloaded from www.Manualslib.com manuals search engine

Table 3-16: Session Configuration Window *continued*

Parameter	Description
Retry Count	The number of times that Management Utility will issue requests to the managed device before reporting a loss of connection. Valid values 0-4.
Read Community	SNMP Read Community string is the password required to read management data from the switch. This value must match the setting for the switch that you are managing as it was set using the Command Line Interface (CLI). If the values do not match, the application will not be able to retrieve information from the switch.
Write Community	SNMP Write Community string is the password required to write management data to the switch. This value must match the setting for the switch that you are managing as it was set using the Command Line Interface (CLI). If the values do not match, the utility will not be able to modity any values in the switch. If the community strings specified do not match what is configured in the switch, the application will not be able to communicate with the switch.

NOTE: If the display properties on your computer system are set to "256 colors," the Community Strings window will appear patterned and unclear. Change your display properties setting to either "True Color (32 bit)" or "High Color (16 bit)" for a sharp, clear image. You will find the display properties setting under Start\Settings\Control Panel\Display\Settings or right-click your desktop and select Active Desktop\Customize\Settings.

Setting up Zoning

Zoning is a function of the MSA Fabric Switch 6 that allows you to create isolated Fibre Channel networks with a limited number of connected devices. By limiting the number of devices in a zone, you can obtain more robust performance and enhance access protection.

Zoning is compliant with the following standards:

- FC-SW-2
- FC-GS3
- FC-MI

Downloaded from www.Manualslib.com manuals search engine

2. If using the Smart Update Firmware DVD, at the menu, select either **Automatic Mode** (default) or **Interactive Mode**.
   - If **Automatic Mode** is selected or the 30 second default timer runs out, the latest firmware available on the DVD is installed. The server automatically reboots when it finishes updating. Log files are not available in this method of installation.
   - If **Interactive Mode** is selected, you must select a specific release set or bundle to apply.
3. At the prompt, select a language and keyboard.
4. Click **Continue**.
5. Read the End-User License Agreement. If you agree to the terms of the license agreement, click **Agree** to continue. The firmware update interface appears.
6. Click the **Firmware Update** tab.
7. Click **Install Firmware**. HP SUM is initiated.
8. Select and install the preferred components. For more information, see the *HP Smart Update Manager User Guide* on the HP website (http://www.hp.com/support/HP_Smart_Update_Manager_UG_en).

Online deployment

To deploy components in an online manner:

1. Choose one of the following options:
   - Insert the Firmware Maintenance CD or DVD, or Smart Update Firmware DVD. The firmware maintenance interface opens automatically.

     In Linux, if autostart is not enabled, you must manually start the CD or DVD.
   - Insert the USB drive key. Manually start the interface, and then open a CLI. To access the Firmware Maintenance CD or DVD, or Smart Update Firmware DVD, enter one of the following commands:

     In Windows®:

     ```
     \_autorun\autorun_win
     ```

     In Linux:

     ```
     /autorun
     ```

     If you are using a USB drive key with multiple images, navigate to the appropriate subfolder to launch autorun for the Firmware Maintenance CD or DVD, or Smart Update Firmware DVD.
2. Read the End-User License Agreement. If you agree to the terms of the license agreement, click **Agree** to continue. The firmware maintenance interface appears.
3. Click the **Firmware Update** tab.
4. Click **Install Firmware**. HP SUM is initiated.
5. Select and install the preferred components. For more information, see the *HP Smart Update Manager User Guide* on the HP website (http://www.hp.com/go/hpsum/documentation).

ROM Update Utility

The ROM update utility is being replaced by HP SUM ("HP Smart Update Manager" on page 80).

The ROM Update Utility is offline ROM flash technology.

To access the ROM Update Utility:

1. Boot the server from one of the following:

Downloaded from www.Manualslib.com manuals search engine

Finally adjust R55 to read +20dB when the maximum clear sky tracking signal is being received.

Note It may be necessary to adjust the links J31 depending on the polarity of the tracking signal. The link options are both links should be either vertical or horizontal.

OPERATIONAL CHECKS

Manual Operation

This test checks the operation of the motor drives and limit switches.

Ensure that all limit and interlock switches are in the normal operating condition.

Switch on the INTRAC. If the System Alarm indicator illuminates press the Standby key. If it remains illuminated view the Show Alarms display to what is causing the alarm. Take the necessary action to clear the cause(s) of the alarm.

Select Manual (P) Mode from the New Mode menu.

Using the Manual Control keys drive the antenna to the full extent of its travel in each direction. Confirm that the antenna actually moves in the required direction. Check that when a limit switch is reached the motor stops and the System Alarm indicator illuminates.

Note Only one Manual Control key should be pressed at one time and it should be fully released before pressing another control key.

If a Dual Speed Motor Drive Cabinet is fitted check that the "FAST" key operates correctly. Pressing the "FAST" key when pressing a Manual Control key should latch fast drive in the required direction. Pressing any Manual Key when in latched Fast Drive should have no effect. Pressing the Fast key again should remove drive.

Emergency Stop Check

Check the operation of the front panel Emergency Stop switch by pressing it when one or more motor's is running. Ensure that the motor(s) stop and will not re-start until the Emergency Stop switch is released and the and the appropriate drive command re-instated.

Downloaded from www.Manualslib.com manuals search engine

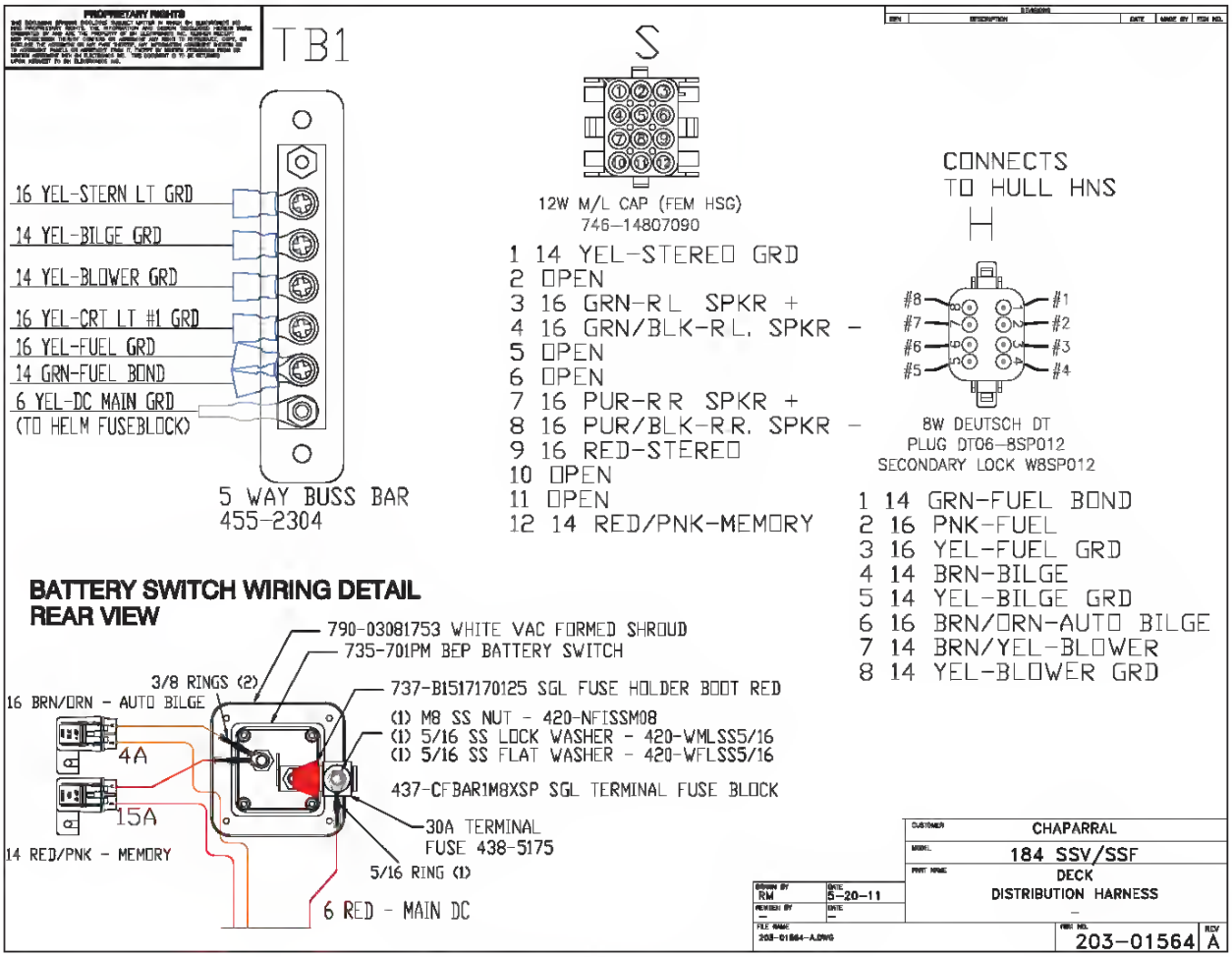

H20 DECK DISTRIBUTION HARNESS

Downloaded from www.Manualslib.com manuals search engine

3. Insert the hot-plug drive into the empty drive bay, pushing until securely seated ❶.
4. Secure the hot-plug drive in the drive cage by swinging the ejector lever inward ❷, as shown below.

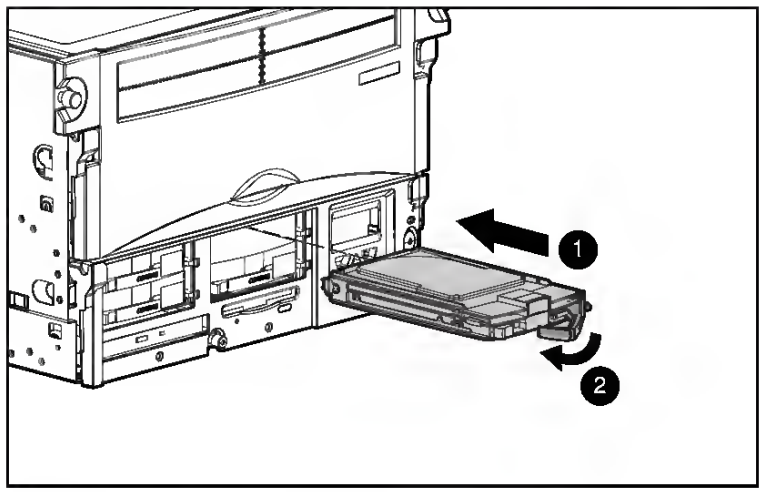

Figure 4-19. Installing a SCSI hard drive

CAUTION: Before removing any hot-plug hard drive, read the important guidelines in the following two sections.

5. To remove a hot-plug SCSI hard drive, push the release button on the left of the drive and rotate the hot-plug drive ejector lever outward to unlock. Pull the drive out of the drive bay.

Downloaded from www.Manualslib.com manuals search engine

Server Passwords

The **Server Passwords** menu configures the password environment of the server. The available options are:

- **Set Admin Password** sets a password to control access to the administrative features of the server. When this password is set, the administrative features of the server cannot be accessed without the correct password being entered.
- **Set Power-On Password** sets a password to control access to the server during power up. When this password is set, the server cannot be powered up without the correct password being entered.
- **Network Server Mode** is a security feature that protects an unattended network server while allowing it to run after a power interruption. When set to **Disabled**, the server operates normally. When set to **Enabled**, the following actions occur:
  - The local keyboard does not function unless the power-on password is entered.
  - When there is not a diskette in the diskette drive, the power-on password is bypassed, allowing the server to start.
  - When there is a diskette in the diskette drive, the server does not start unless the power-on password is entered locally.

  NOTE: Network Server Mode cannot be enabled until a power-on password has been established through the **Set Power-On Password** menu.
- **Quicklock** enables or disables the Quicklock feature. When set to **Enabled**, the keyboard is locked by pressing the **Ctrl+Alt+L** keys. The keyboard remains locked until the password is typed in.

  NOTE: If the password is disabled at the power-on key prompt, the Quicklock password feature will remain active until the next time the system is turned on.

Downloaded from www.Manualslib.com manuals search engine

Removing the Riser Board Shipping Bracket

Some ProLiant ML370 servers are packaged with a shipping bracket for greater stability in the area of the riser board. Before installing an expansion board, remove the shipping bracket:

1. If your server contains a riser board shipping bracket, press in on the tab ❶ on the back of the shipping bracket to release it, as shown in the illustration below.
2. Slide the bracket toward the system board and lift out, away from the assembly ❷.

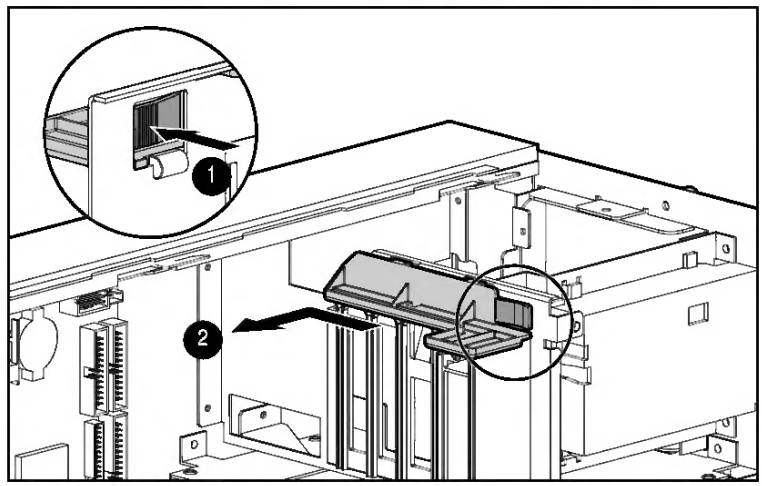

Figure 4-10. Removing the riser board shipping bracket

NOTE: The shipping bracket may not be included on all servers.

Installing an Expansion Board

To install an expansion board, such as a drive array controller or video board, refer to one of the following installation sources:

- For a text and illustration procedure, refer to the installation documentation that came with the option kit.
- For a text overview of the procedure, refer to the procedure below.

Downloaded from www.Manualslib.com manuals search engine

The first screen Bluetooth Settings has ON/OFF buttons to apply/remove power to the hardware.

Bluetooth Settings

The Bluetooth Settings screen's tabs are :

- Gerneral
  - User profile selection
  - Bluetooth status (ON/OFF) indicator
  - Hardware power control (ON/OFF)
  - Shortcut to the Bluetooth Manager
- Accessibility
  - Set the device name
  - The handheld's Bluetooth Device Address (BDA)
  - Determine which remote devices are allowed to connect
  - Determine whether remote devices can "see" this handheld
- Service tabs-Bluetooth can provide four services. They are:
  - File Transfer-set the highest-level directory on this handheld that remote devices will be able to access.
  - Information Exchange-Set the default business card (Pocket Outlook contact entry)
  - Serial Port-Bluetooth serial port information
  - Dial-up Networking-configure the COM port, baud rate and flow control.
  - Personal Network Server-configure the service availability
- About-there are no configurable options on this tab.
  - Software version information
  - Copyright information
  - Website and Technical Support links.

Bluetooth Manager

The Bluetooth Manager allows you to create, manage, and use Bluetooth connections with remote devices.

To access Bluetooth Manager:

- From the Today screen, tap and then:
  - tap > Programs > Bluetooth Manager.

  or
- In the lower-right corner of the screen, tap the Bluetooth icon and then select Bluetooth Manager.

Bluetooth Manager has :

- Two tabs:

Downloaded from www.Manualslib.com manuals search engine

Table 17 describes common symptoms relating to the Interface Manager card and how to resolve them.

Table 17: Common Interface Manager issues

Symptom	Possible Cause	Solution
Command View TL server does not detect the Interface Manager card	Bad network connection	■ Verify that the Interface Manager card and the management station are correctly connected to the LAN. ■ Use LEDs to troubleshoot Ethernet cabling. ■ Ping the Interface Manager to verify network health.
	Interface Manager card not powered on or in ready state	■ Power on the library. Observe status and link LEDs. ■ Interface Manager must be at firmware I120 or higher on an ESL E-series library. ■ Interface Manager must be at firmware I130 or higher if connected to an e2400-FC 2G.
	Incorrect IP address	Verify that the correct IP address of the Interface Manager card is entered in Command View TL. ■ See the *HP StorageWorks ESL E-Series Unpacking and Installation Guide* for information on obtaining the correct IP address using the OCP. ■ Configure Command View TL with the correct IP address.See the *HP StorageWorks Interface Manager and Command View TL User Guide* for information on adding a library or visit http://www.hp.com/support/cvtl.

Table 3-16
ADU Diagnostic Messages *continued*

Message	Description	Recommended Action
Drive (bay) X is a replacement drive marked OK	This drive has been replaced and marked OK by the firmware. This may occur if a drive has an intermittent failure (for example, if a drive has previously failed, and then when ADU is run, the drive starts working again).	Replace the drive.
Drive (bay) X is failed	The indicated physical drive has failed.	Replace the drive.
Drive (bay) X is undergoing drive recovery	This drive is being rebuilt from the corresponding mirror or parity data.	Normal operations should resume.
Drive (bay) X needs replacing	The 210-megabyte hard drive has firmware version 2.30 or 2.31.	Replace the drive.
Drive (bay) X upload code not readable	An error occurred while ADU was trying to read the upload code information from this drive.	If there were multiple errors, this drive may need to be replaced.
Drive (bay) X was inadvertently replaced	The physical drive was incorrectly replaced after another drive failed.	Replace the drive that was incorrectly replaced and replace the original drive that failed. Do not run the System Configuration Utility and try to reconfigure; data will be lost.
Drive Monitoring features are unobtainable	ADU unable to get monitor and performance data due to fatal command problem such as drive time-out, or unable to get data because these features are not supported on the controller.	Check for other errors (time-outs, and so on). If no other errors occur, upgrade the firmware to a version that supports monitor and performance, if desired.
Drive Monitoring is NOT enabled for SCSI Port x Drive ID x	The monitor and performance features have not been enabled on this drive.	Run the System Configuration Utility to initialize the monitor and performance features.
Drive time-out occurred on physical drive bay X	ADU issued a command to a physical drive and the command was never acknowledged.	The drive or cable may be bad. Check the other error messages on the Diagnostics screen to determine resolution.
Drive X indicates position Y	Message indicates physical drive that appears to be scrambled or in a drive bay other than the one for which it was originally configured.	Examine the graphical drive representation on ADU to determine proper drive locations. Remove drive X and place it in drive position Y. Rearrange the drives according to the ADU instructions.
Duplicate write memory error	Data could not be written to the Array Accelerator board in duplicate due to the detection of parity errors. This is not a data loss situation.	Replace the Array Accelerator board.

continued

Downloaded from www.Manualslib.com manuals search engine